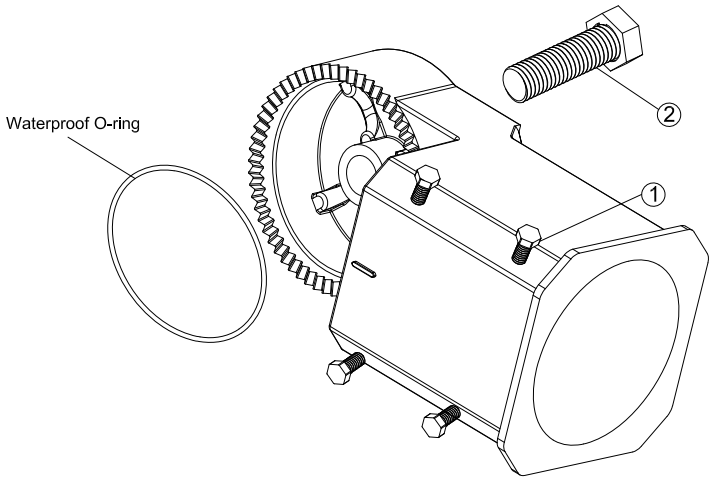

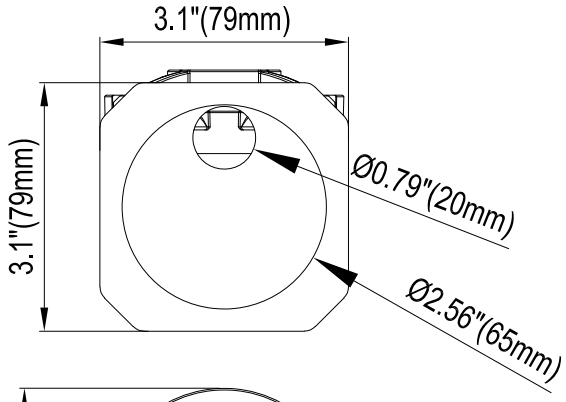

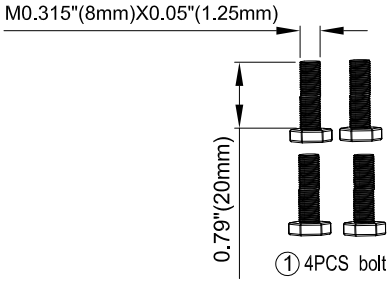

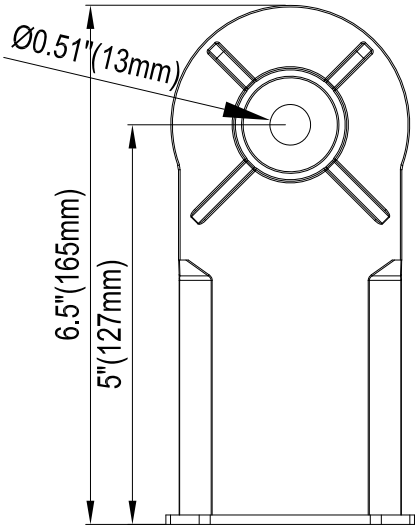

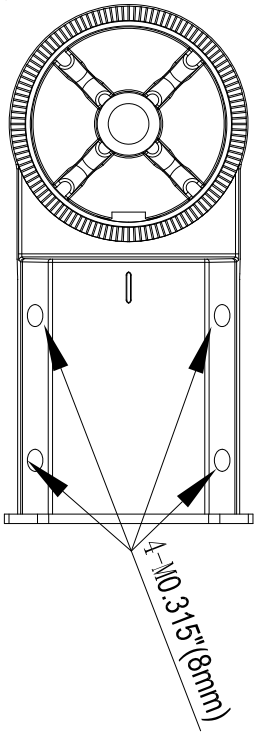

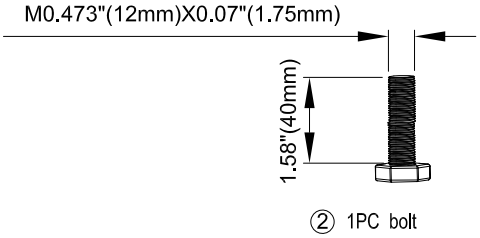

Technical requirements:
1. Material: ADC12 aluminum alloy

WSD LED INC Green Lighting Resources				edition	Modifier	Time of modification	Repair the interior
Material No.		Edition	A/0	Page 1/1	Tolerance requirements:(tolerance without special requirements)		Date
Material Name	NEWSBSF2	proportion		Angle	NO ±0.2	mapping	
Specification Description		unit			.x ±0.1	check	
Drawing Number		material quality			.xx ±0.05 .xxx±0.015	examine and verify	