Installation Guide

Recessed Mounting

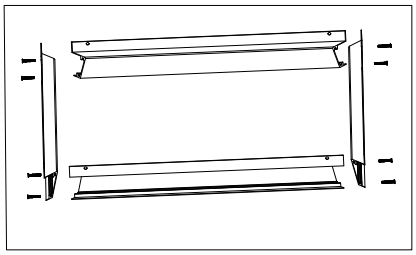

Step 1: Assemble and Fix the outer frame by screws as picture show.

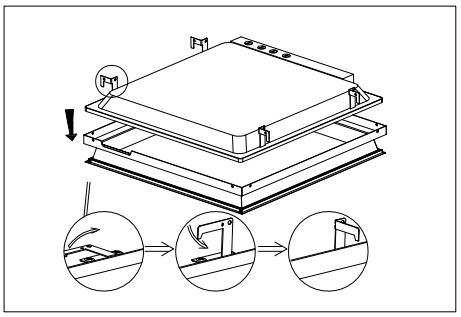

Step 2: Stand the 4 clasps of the lamp as shown and retate it 90 degrees to place the lamps into the outer frame. You can use hands(but be sure to wear the gloves)or use pliers and adjust the height of the clasps to the height of the outer frame to prevent the lanp from falling.

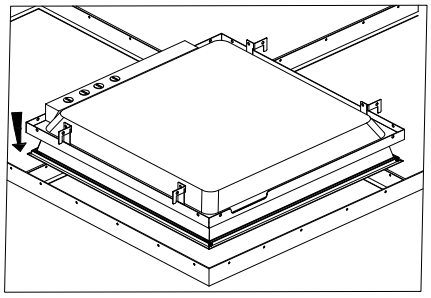

Step 3: Insert luminaire into T-bar ceiling grid. Secure safety cable to connection hole as needed to meet local seismic requirements. Safety cable and method of attachment to the building provided by contractor according to local building codes.

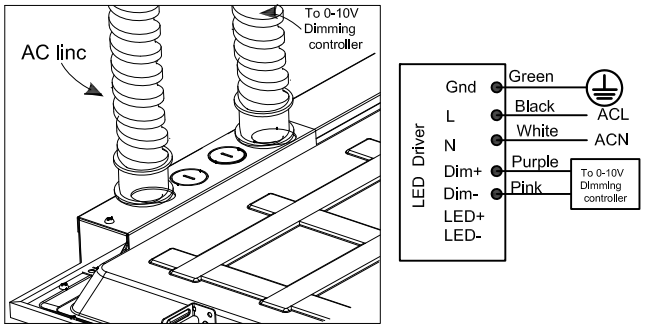

Step 4: Connect the AC Line accoding to the wiring diagram as shown in picture.

Cable Suspended Mounting

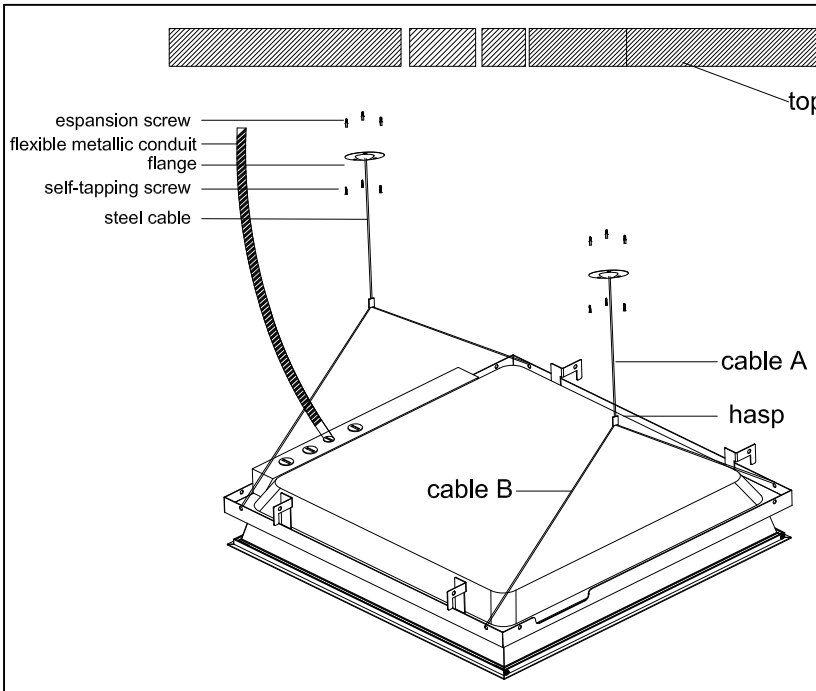

Installation Steps:

Step 1: Replace the exiting earth quake tabs with the provided brackets which are used for fixing adjustable cables.

Step 2: Pull the end cap of cable A through the provided flange and make sure the end cap positioned in the flange.Fix the flanges onto the ceiling by the seif-tapping screws.

Step 3: Insert the end of cable A into the hasp attached on the cable B.then adjust the cable A to be desired height and adjust the cable B to the desired angles.

Step 4: Hook the luminaire up to the hooks attached to the other end of cable B and make a final adjustments..

Step 5: Connect LED driver to AC mains power.