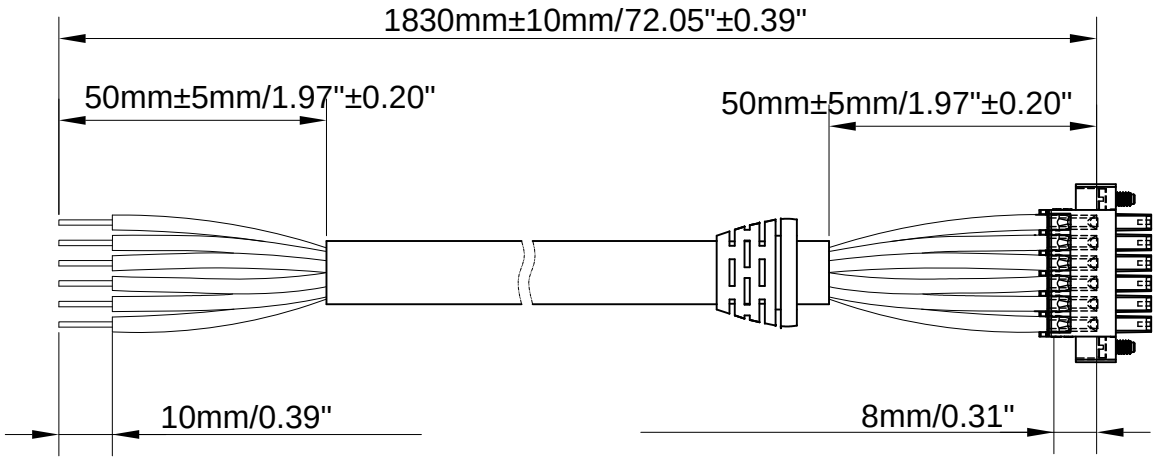

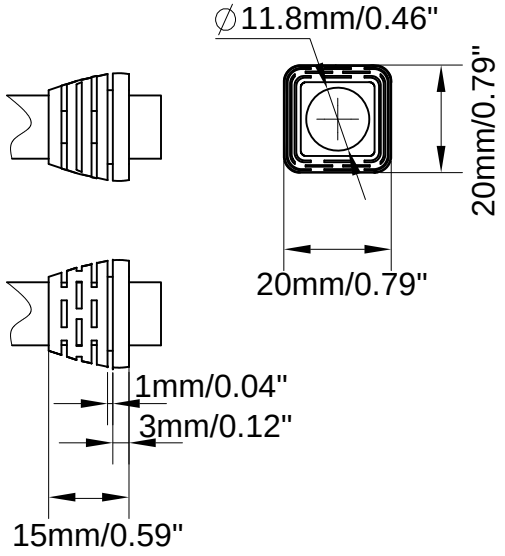

Technical Requirements:

1.Material:SJT PVC
2.Specification:UL/18AWG/Six Core/Power Cord
3.Pressure resistance:300V
4.Temperature resistance:105°C

WSD LED INC Green Lighting Resources				edition	Modifier	Time of modification	Repair the interior
Material No.	401.0266	Edition	A/0	Page 1/1	Tolerance requirements:(tolerance without special requirements)		Date
Material Name	WSD-OL-6CPC-6FT-W	proportion		Angle	NO ±0.2	mapping	
Specification Description		unit			.x ±0.1	check	
Drawing Number		material quality			.xx ±0.05 .xxx±0.015	examine and verify	