

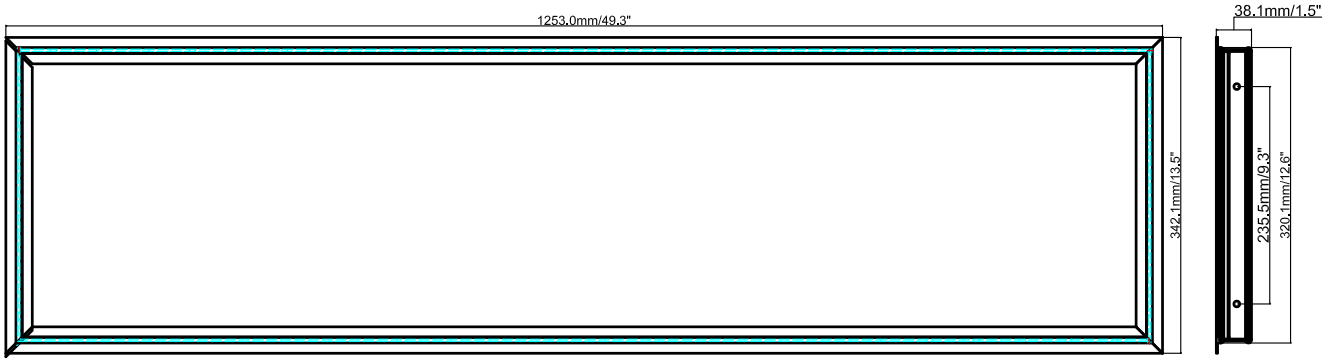

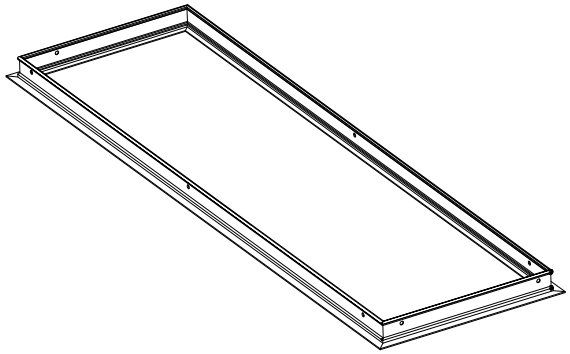

WSD LED INC Green LIghtIng Resources			edition	Modifier	Time of modification	Repair the interior	
Material No.	907.0310	Edition	A/0	Page 1/1	Tolerance requirements:(tolerance without special requirements)		Date
Material Name	WSD-14LPZTRF-KIT-W	proportion		Angle	NO ±0.2	mapping	
Specification Description		unit			.x ±0.1 .xx ±0.05	check	
Drawing Number		material quality			.xxx±0.015	examine and verify	

Unit: mm/inch

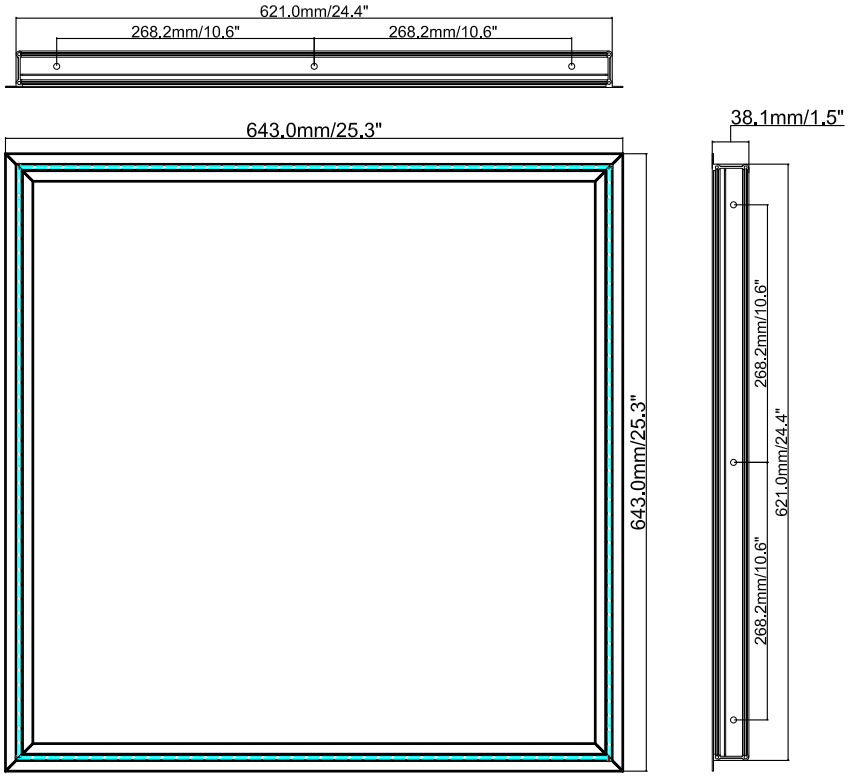

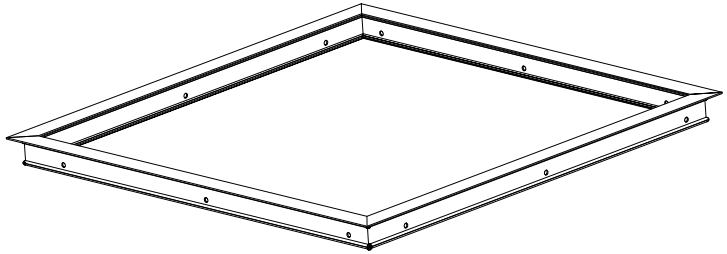

WSD LED INC Green Lighting Resources							
			edition	Modifier	Time of modification	Repair the interior	
Material No.	907.0311	Edition	A/0	Page 1/1	Tolerance requirements:(tolerance without special requirements)		Date
Material Name	WSD-22LPZTRF-KIT-W	proportion		Angle	NO ±0.2	mapping	
Specification Description		unit			.x ±0.1 .xx ±0.05	check	
Drawing Number		material quality			.xxx±0.015	examine and verify	

Unit: mm/inch



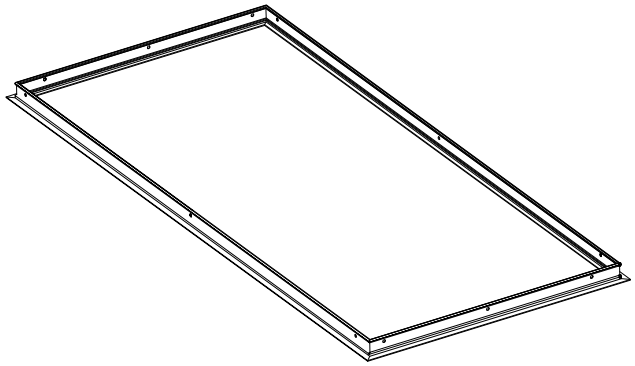

WSD LED INC Green Lighting Resources							
			edition	Modifier	Time of modification	Repair the interior	
Material No.	907.0312	Edition	A/0	Page 1/1	Tolerance requirements:(tolerance without special requirements)		Date
Material Name	WSD-24LPZTRF-KIT-W	proportion		Angle	NO ± 0.2	mapping	
Specification Description		unit			.x ± 0.1 .xx ± 0.05	check	
Drawing Number		material quality			.xxx± 0.015	examine and verify	

Installation Instruction

KIT'S DIMENSIONS

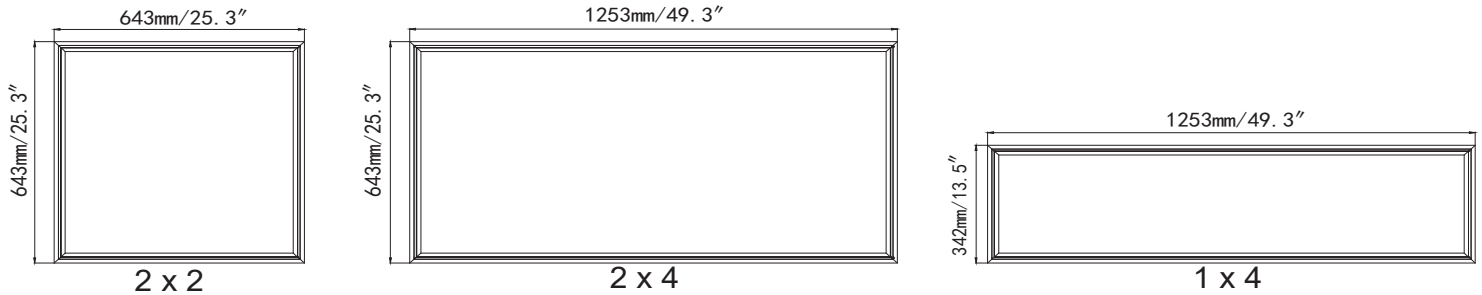

1.Assemble the mounting frame using mounting screws (included).

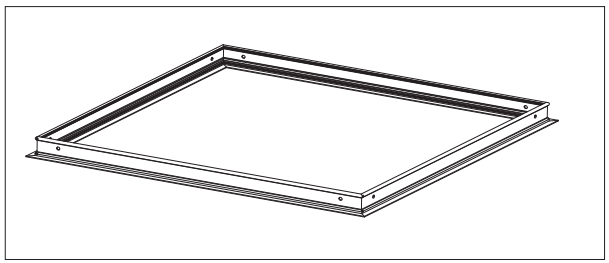

2.Cut out an opening according to the dimension table.

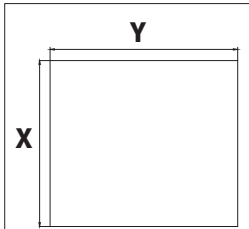

CATALOG NUMBER	OPENING SIZE	
	X	Y
2 x 2	626mm	626mm
2 x 4	626mm	1235mm
1 x 4	325mm	1235mm

3.Choose the mounting method : Mounting using mounting screws (not included) or mounting using mounting screws (not included).

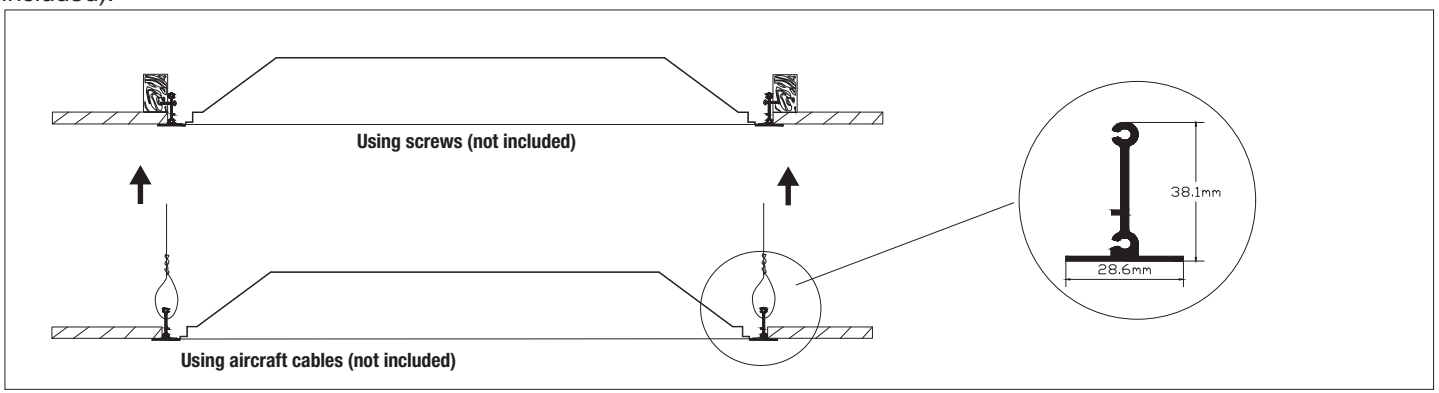

4.Place the kit in the ceiling opening and secure it with the screws.

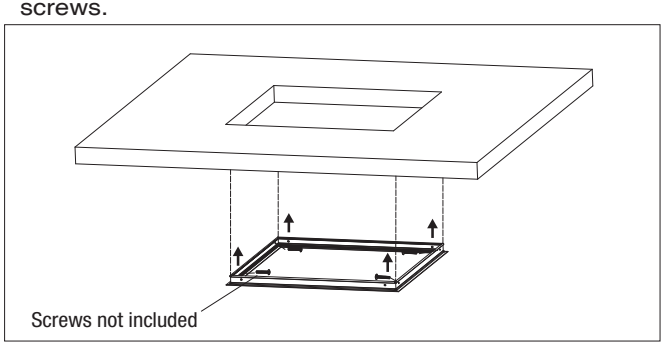

5.The installation is completed.

