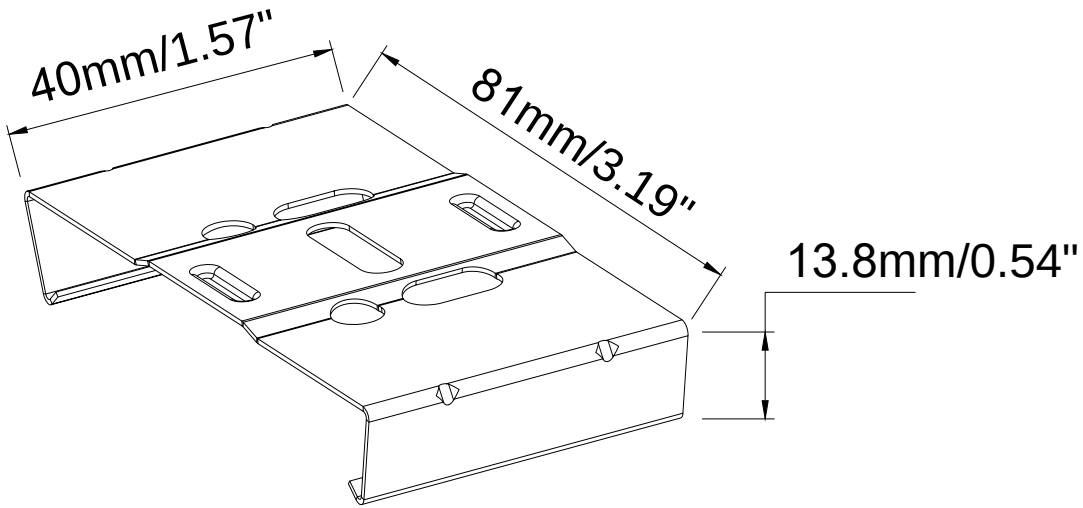
40mm/1.57"
81mm/3.19"
13.8mm/0.54"