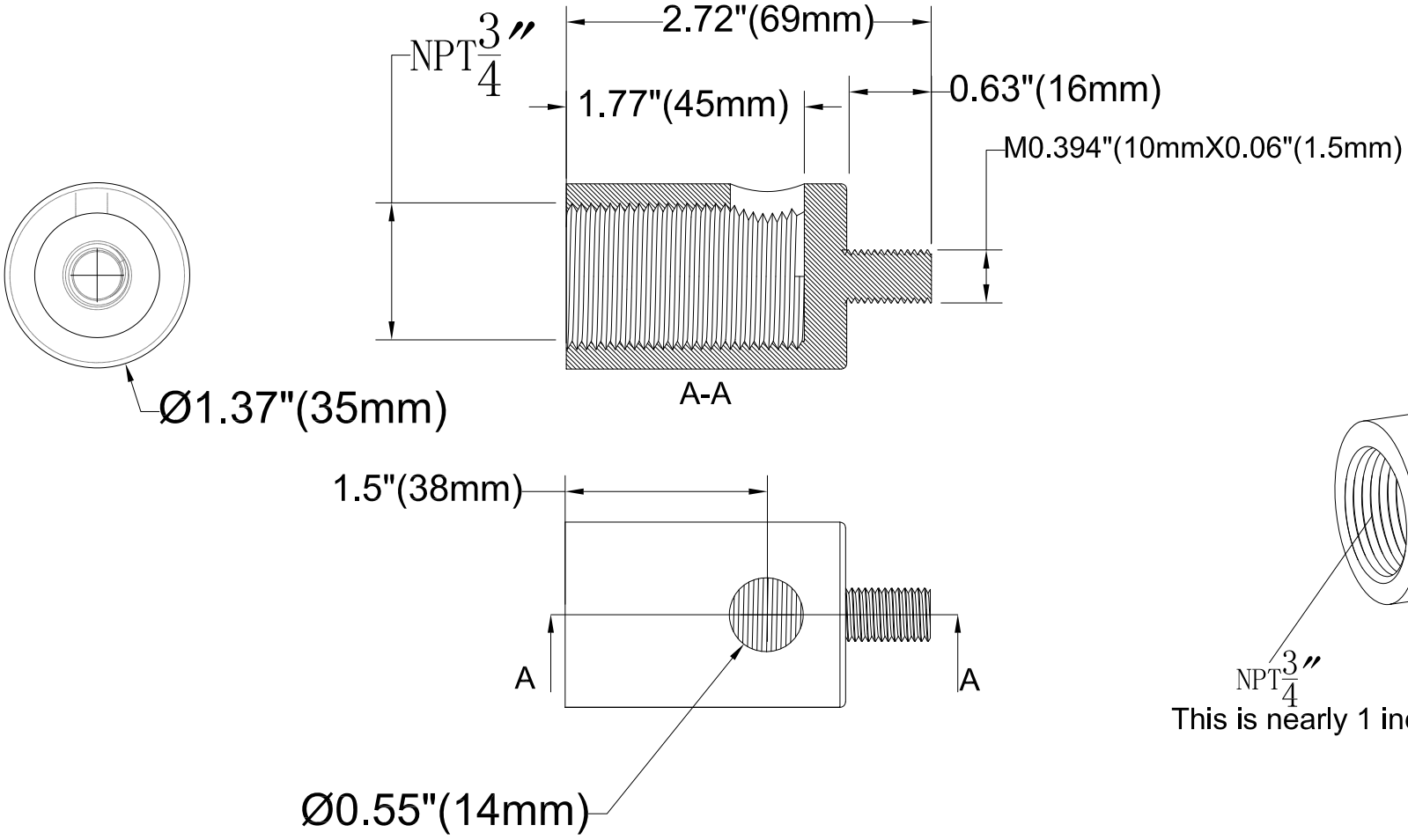

Technical requirements:
1. Material: 45# Steel

WSD LED INC Green Lighting Resources			edition	Modifier	Time of modification	Repair the interior	
Material No.		Edition	A/0	Page 1/1	Tolerance requirements:(tolerance without special requirements)		Date
Material Name	PDUFO-M10-3/4	proportion		Angle	NO ± 0.2	mapping	
Specification Description		unit			.x ± 0.1	check	
Drawing Number		material quality			.xx ± 0.05 .xxx± 0.015	examine and verify	