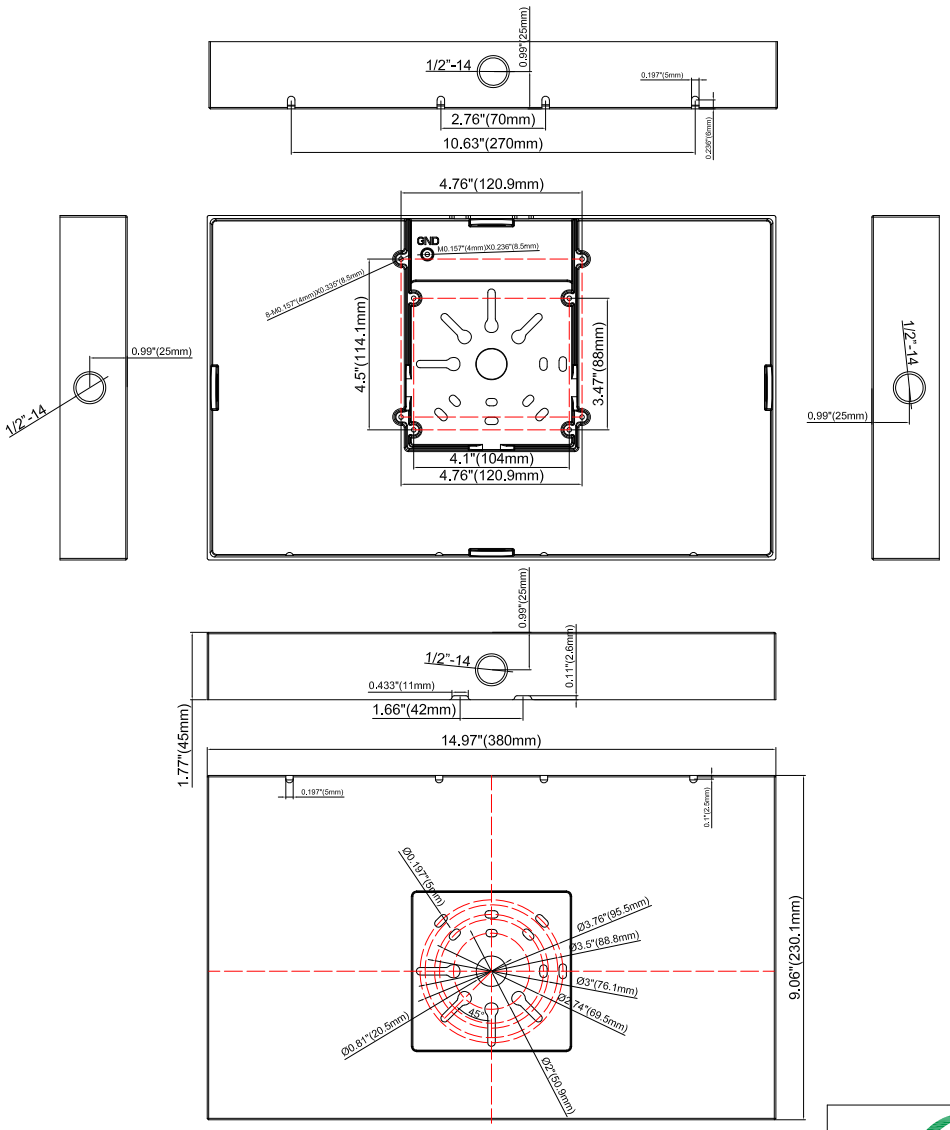

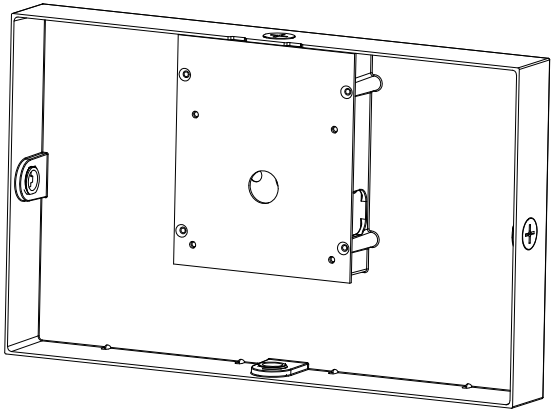

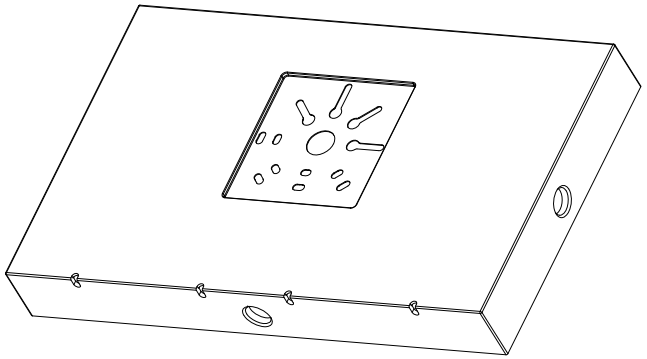

Technical requirements:
1.Material: ADC12.

WSD LED INC Green Lighting Resources							
			edition	Modifier	Time of modification	Repair the interior	
Material No.	921.0256	Edition	A/0	Page 1/1	Tolerance requirements:(tolerance without special requirements)		Date
Material Name	WSD-165AFW-J-BOX-D	proportion		Angle	NO ±0.2	mapping	
Specification Description		unit			.x ±0.1 .xx ±0.05	check	
Drawing Number		material quality			.xxx±0.015	examine and verify	