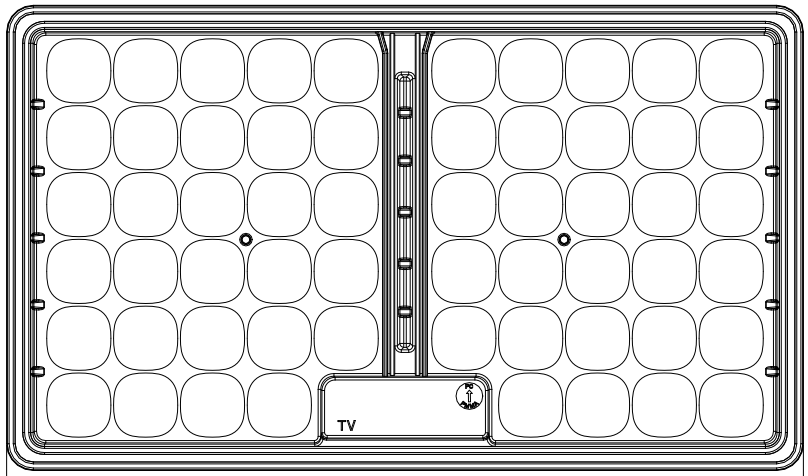

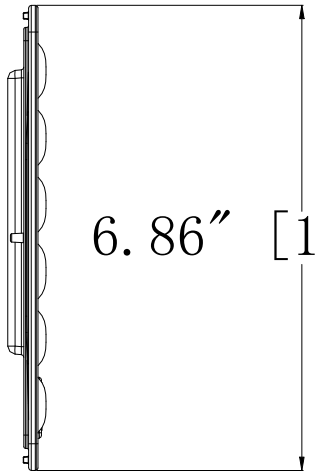

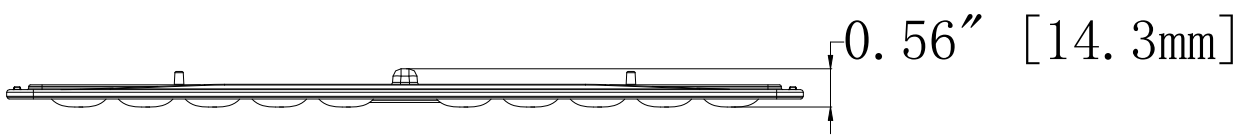

WSD LED INC Green Lighting Resources								
			edition	Modifier	Time of modification	Repair the interior		
Material No.	304.0108	Edition	A/0	Page 1/1	Tolerance requirements:(tolerance without special requirements)			Date
Material Name	WSD-AL-150W-TP5	proportion	1/2	Angle	NO ±0.2 .x ±0.1 .xx ±0.05 .xxx±0.015	mapping		
Specification Description		unit				check		
Drawing Number		material quality				examine and verify		