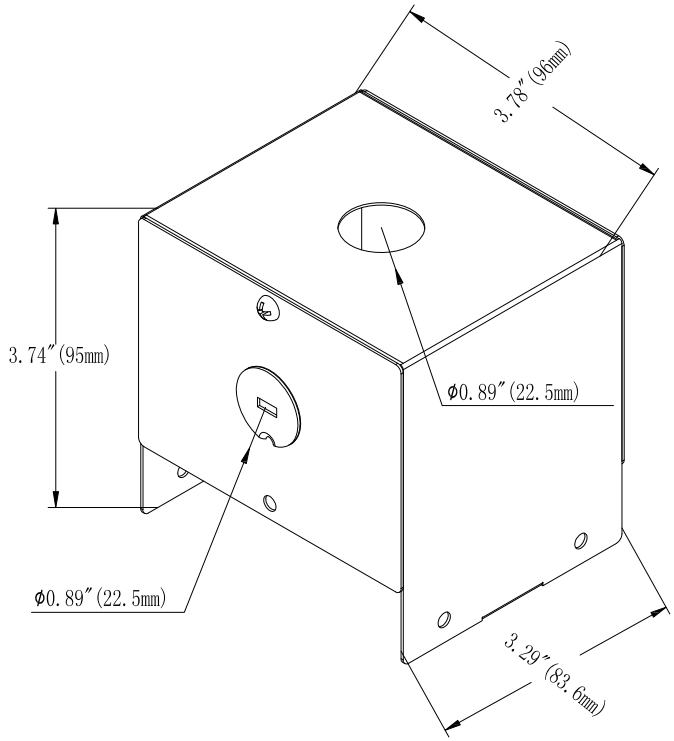

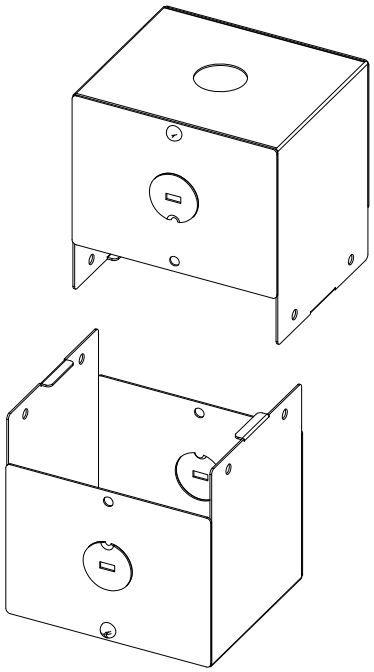

WSD LED INC Green Lighting Resources							
			edition	Modifier	Time of modification	Repair the interior	
Material No.	311.0109	Edition	A/0	Page 1/1	Tolerance requirements:(tolerance without special requirements)		Date
Material Name	WSD-LHB-PMK-LID	proportion		Angle	NO ± 0.2 .x ± 0.1 .xx ± 0.05 .xxx± 0.015	mapping	
Specification Description		unit				check	
Drawing Number		material quality				examine and verify	