Installation guide

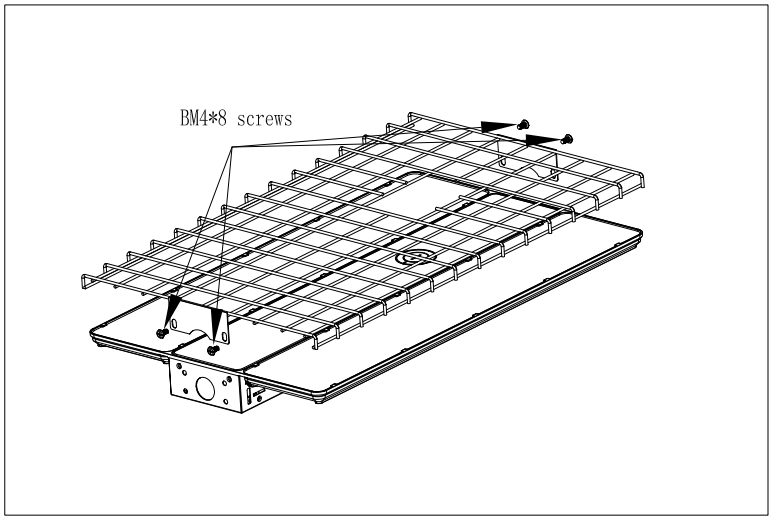

1、The position of the protective net is oriented as shown in the figure. Pay attention to the direction of the sensor base hole on the lamp and the protective mesh hole，Aim the hole of the side cover of the protective net at the fixed hole on the electrical box.

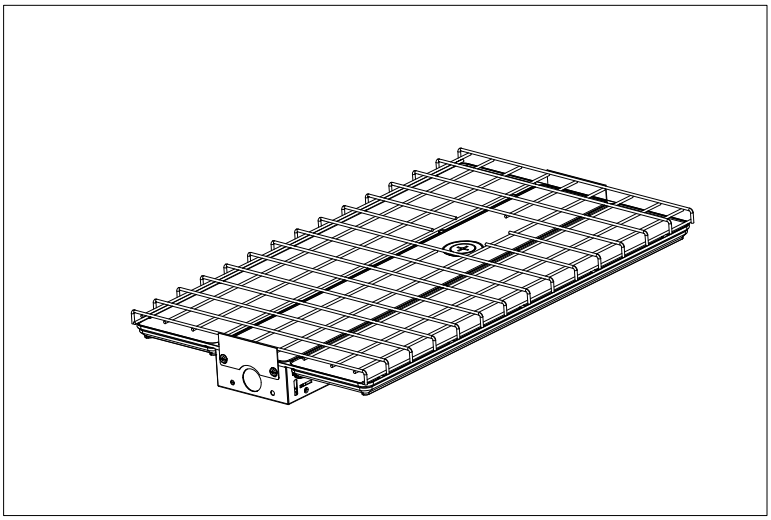

2、Fixed by 4pcs BM4*8 screws