Installation Instructions

85-240 W SELECTABLE SERIES | 120-277 VAC OR 277-480 VAC - VERIFY FIXTURE LABEL

For WSD LED 85-240 W selectable UFO high bay luminaires. Verify the fixture nameplate for input voltage, wattage range, and installed options. Read and retain these instructions before installation or service.

WARNING - RISK OF FIRE, ELECTRIC SHOCK, OR INJURY

- Installation, service, and maintenance must be performed by a qualified licensed electrician in accordance with applicable codes.
- Disconnect branch-circuit power at the fuse or circuit breaker before wiring, servicing, or changing selector settings. Verify that power is off before touching conductors.
- Verify that the supply voltage matches the voltage shown on the luminaire label. Do not connect a 120-277 V fixture to a 277-480 V circuit, or vice versa.
- Use UL Listed wire connectors suitable for the conductor size, voltage, and installation environment.
- Protect wiring from sharp metal edges. Do not drill or alter the wiring enclosure except at factory-provided openings.
- Support the fixture with the specified hook, chain, pendant adapter, or yoke bracket. Install the safety cable where required.

IMPORTANT PRODUCT AND WARRANTY NOTICE

- The luminaire nameplate, approved submittal, and accessory-specific instructions control if they differ from this guide.
- Improper installation, unauthorized modification, incompatible accessories, or operation outside marked ratings may void warranty and create hazards.
- The written WSD LED limited warranty governs all warranty claims; this guide does not create or expand warranty coverage.

CAUTION AND NOTICES

- Avoid direct eye exposure while the light is on. Disconnect power and allow the fixture to cool before handling.
- Use supply conductors rated at least 90 °C. Ground the fixture using the green or bare equipment-grounding conductor.
- Suitable for damp or wet locations only when identified on the luminaire label and installed with all seals intact.

General Wiring Diagram

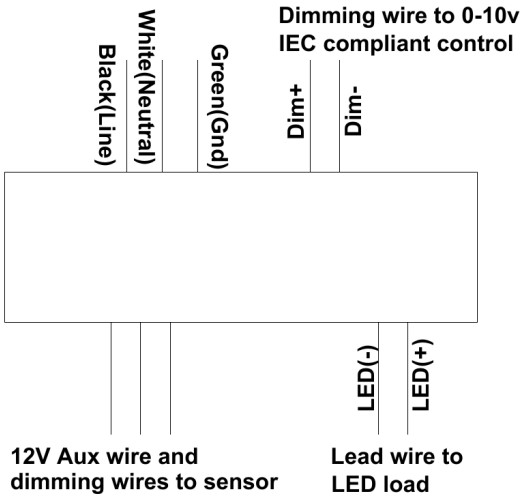

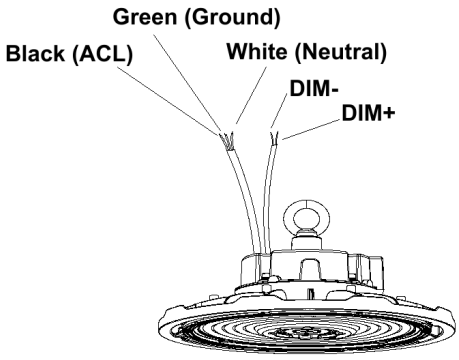

TX HEAD
2010 Com sales@ilighting.com
+1 (469) 857-5693

CA WAREHOUSE
42636 Avenida Alvarado, Temecula, CA 92590
+1 (469) 226-2345

CONTACT

Sensor and Selector Setup

DE-ENERGIZE BEFORE OPENING

Turn off power at the main breaker and verify the circuit is de-energized before installing a sensor or changing wattage/CCT settings.

Optional Sensor Installation

Bluetooth sensor options: NLC-BT-MW-SR-001 is specifically for the Silvair control system, while NLC-BT-MW-GE-001 is specifically for the GEBC control system. Do not substitute these two models.

Other sensor options include NLC-MW-PT-002 and NLC-PIR-PT-001. Confirm the receptacle type, control platform, and compatibility before ordering; sensor models are not interchangeable.

- Remove the factory knockout or protective plug using a screwdriver without damaging the receptacle.
- Insert or thread the approved sensor into the receptacle and tighten it securely.
- Program and test the sensor with its compatible remote, app, or commissioning tool, as applicable.

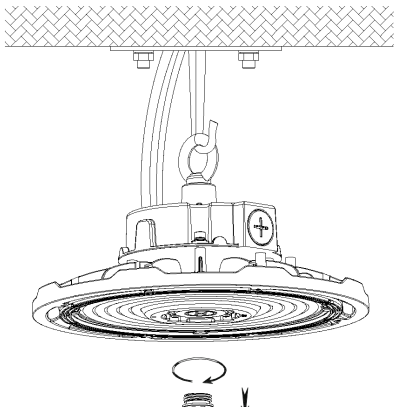

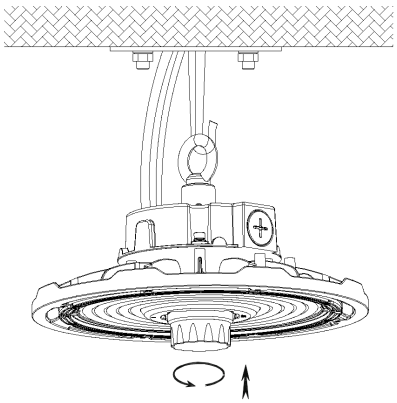

Silvair Commissioning

Developer: Silvair, Inc.

OPEN APPLE APP STORE

GEBC

Developer: HOMEWELL, INC.

OPEN APPLE APP STORE

Wattage and CCT Selection

- Remove the selector cover and set both switches to labeled detent positions only.
- Available wattage groups are 85/120/150 W, 115/160/200 W, or 140/190/240 W, depending on fixture size. CCT settings are 3500 K, 4000 K, and 5000 K.
- Verify the selected values against the fixture label, reinstall the cover, and restore power. Never move selector switches while the fixture is energized.

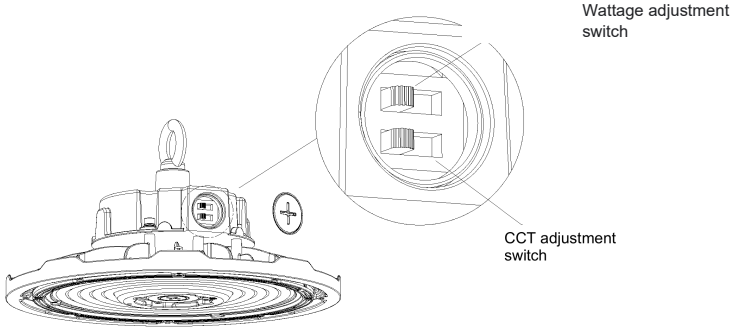

Mounting Methods

BEFORE INSTALLATION

Disconnect power. Confirm that the supporting structure is rated for the fixture weight and dynamic loads. Attach the safety cable to an independent structural point.

A. Hook or Chain

- Secure the supplied eyebolt, then suspend the fixture from a listed hook or chain and lock all connectors.
- Attach the safety cable and complete wiring in accordance with Page 1 and local code.

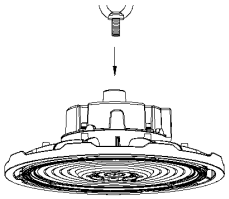

Figure 1

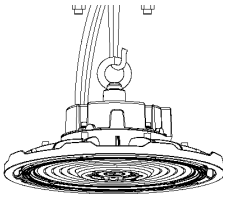

Figure 2

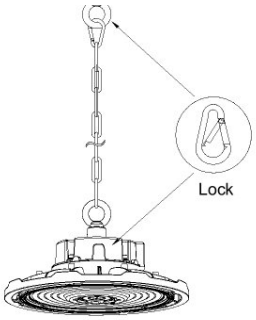

Figure 3

B. Rigid Pendant

- Use the approved adapter for the fixture and voltage class. The source design uses a 3/4 in. NPT connection.
- Thread onto the rigid pendant, tighten locking hardware, attach the safety cable, and complete wiring.

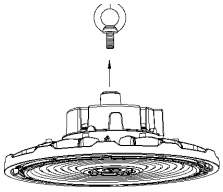

Figure 4

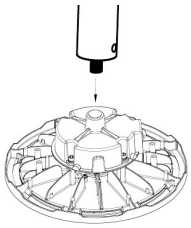

Figure 5

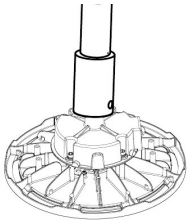

Figure 6

C. Yoke-Bracket Mounting

- Use the yoke as a template and install structural fasteners appropriate for the mounting surface.
- Attach both side brackets, set the aiming angle, tighten both pivot fasteners, attach the safety cable, and complete wiring.

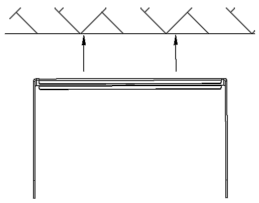

Figure 7

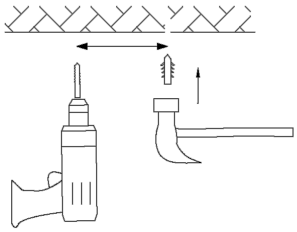

Figure 8

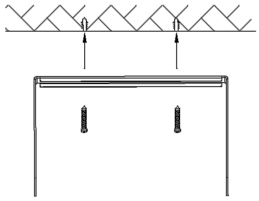

Figure 9

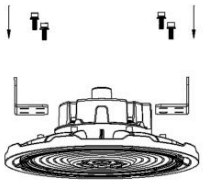

Figure 10

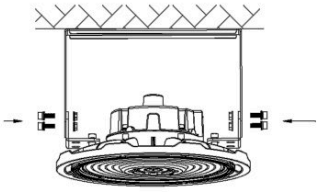

Figure 11

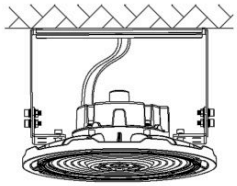

Figure 12

Mounting Orientations

Ceiling mount	Wall mount	Conduit / Pipe mount
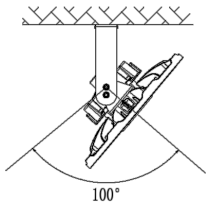	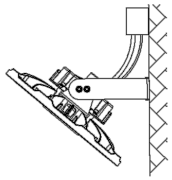	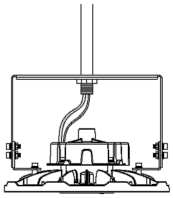

TX HEAD
2010 Com sales@ilighting.com
+1 (469) 857-5693

CA WAREHOUSE
42636 Avenida Alvarado, Temecula, CA 92590
+1 (469) 226-2345

CONTACT

Reflector and Wire-Guard Accessories

ACCESSORY COMPATIBILITY

Select the accessory made for the fixture size. Do not force mismatched reflectors, covers, dust plates, or wire guards. Accessories are sold separately.

- Align the reflector or wire guard with the factory mounting holes shown below.
- Install all supplied screws and tighten evenly. Do not over-tighten plastic components.
- The black dust plate shown in the source drawing is for the 85-150 W fixture size only. Verify the accessory SKU before installation.

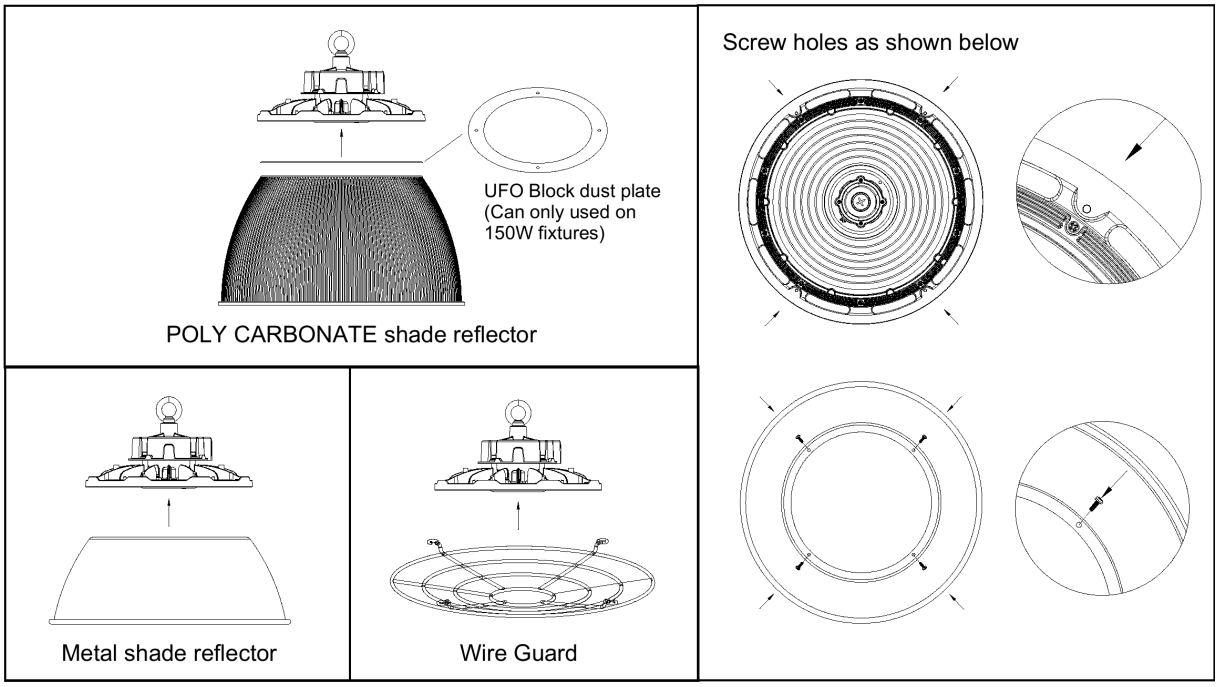

Polycarbonate Reflector-Cover Installation

- Place the polycarbonate cover over the reflector and align both edges.
- Install the hose clamp around the aligned edges.
- Secure the cover with the supplied stainless-steel double-hook spring, then verify that the cover is fully retained.

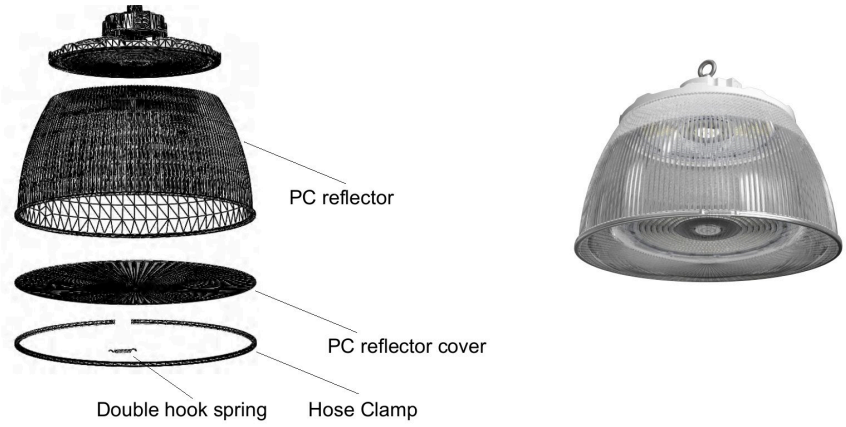

TX HEAD
2010 Com sales@ilighting.com
+1 (469) 857-5693

CA WAREHOUSE
42636 Avenida Alvarado, Temecula, CA 92590
+1 (469) 226-2345

CONTACT

Optional Emergency Backup

TECHNICAL COMPATIBILITY MUST BE CONFIRMED

The current product data sheet identifies WSD-EMUFO40W347-R as the 40 W emergency option for 120-277 V luminaires. Do not install it on 277-480 V models unless WSD provides written approval for the exact fixture and driver combination.

Use only a factory-configured or WSD-approved emergency package. Follow the emergency-driver instructions supplied with the approved kit; those wiring instructions control if they differ from this overview.

Mechanical Arrangement

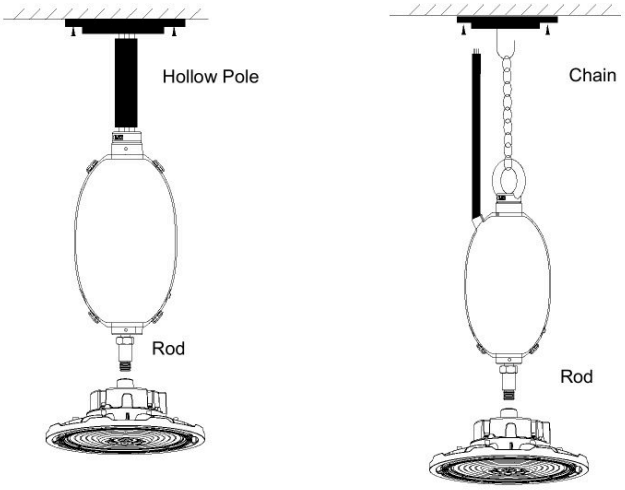

General wiring diagram

Without sensor

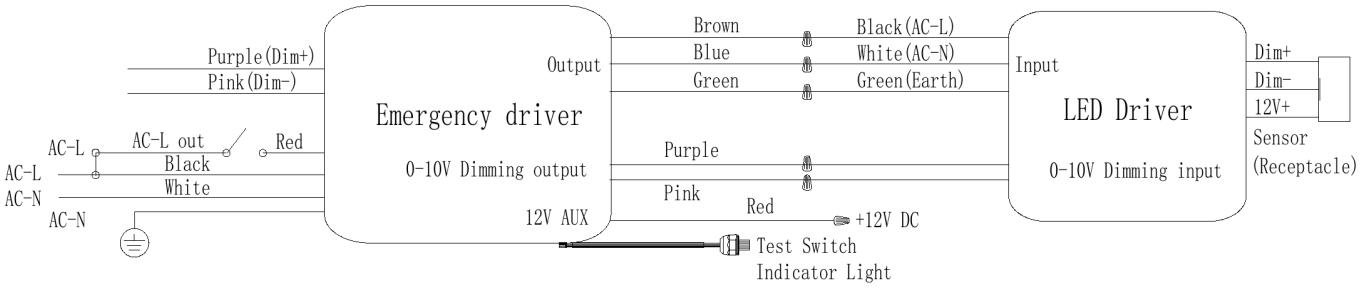

With sensor

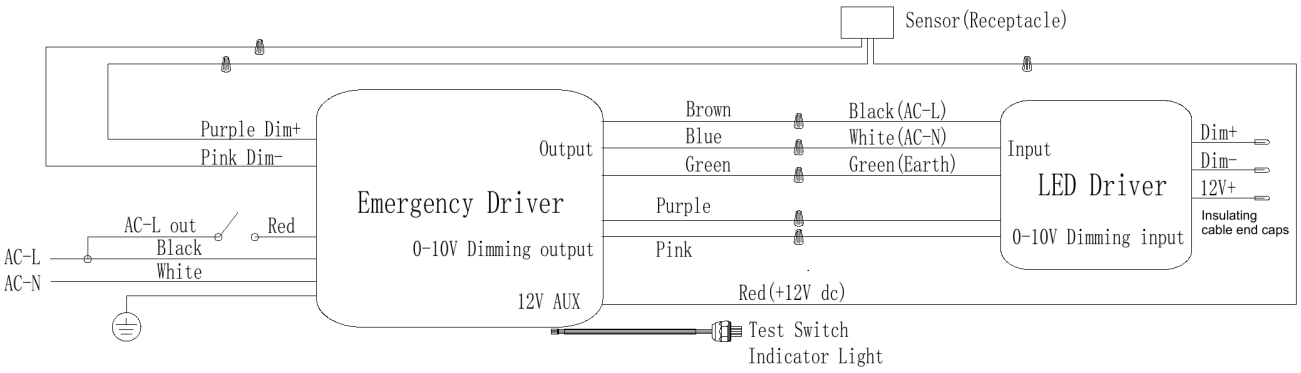

WIRING DIAGRAM APPLIES TO THE APPROVED 120-277 V EMERGENCY PACKAGE ONLY. DO NOT USE FOR 277-480 V FIXTURES WITHOUT WRITTEN WSD APPROVAL.