LED Flood Light Series

Wattages: 30W, 45W, 70W

WSD LED Flood Lighting series can be widely used in indoor or outdoor lighting (wet location). Ideal for excellent for museums, art galleries, shopping malls, office buildings, the lawn, walls, and many more applications.



FEATURES

- Lumileds LED, high luminous efficiency and long working life.
- High efficiency LED Driver, the wide range input voltage AC120-277V.
- Optics design, greatly improve the light utilization and evenness.
- Photocell Control Available (Option)



Die-cast aluminum cooling design, high quality and better cooling for LED Tj < 85°C.

SPECIFICATION			
WATTAGE	30W	45W	70W
LUMEN	4350 lm	6750 lm	10441 lm
EFFICACY	145 lm/W	150 lm/W	150 lm/W
CCT	4000K, 5000K		
CRI	70		
INPUT VOLTAGE	120-277V		
POWER FACTOR	0.95		
DRIVER EFFICACY	90%	88%	
DIMMING	1-10V Dimming		
LIGHT ANGLE	101°	98°	
LIFE SPAN	75,000 hrs		
WORKING TEMPERATURE	-22°F ~ 113°F		
STORAGE TEMPERATURE	-40°F ~ 176°F		
OUTDOOR RATING	Wet location/IP65		
CABLE	Input Connect (11.8 inch)	Input Connect (19.69 inch)	
WARRANTY	5 year limited		

LED Flood Light Series

Wattages: 30W, 45W, 70W

DIMENSION

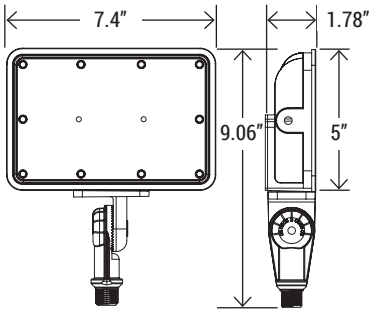

TRUNNION

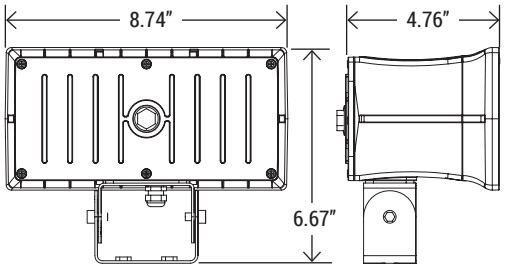

KNUCKLE

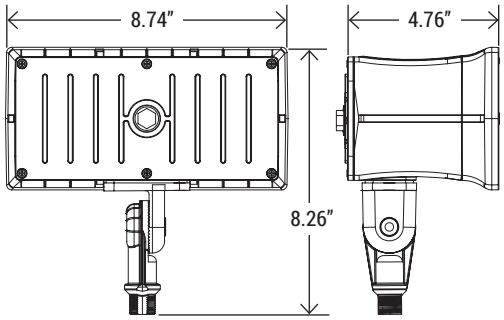

WATTAGE	30W
NT. WEIGHT	13.8 lbs (10 pcs/carton)
BOX DIM.	24.41” x 10.43” x 8.07”

WATTAGE	45W
NT. WEIGHT	7.12 lbs (4 pcs/carton)
BOX DIM.	14.76” x 9.84” x 13.39”

WATTAGE	70W
NT. WEIGHT	7.64 lbs (4 pcs/carton)
BOX DIM.	14.76” x 9.84” x 13.39”

MOUNTING (SOLD SEPARATELY)



WSD-FLT-D
Trunnion for Flood Light 20W-70W

CONTROLS (SOLD SEPARATELY)

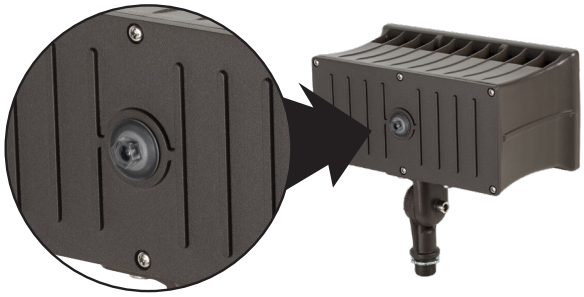

P (Photocell)

ORDERING INFORMATION

EXAMPLE:

WSD-FL-07W27-50K-D-K-P

WSD	FL	07W	27	50K	D	K	P
COMPANY	PRODUCT	WATTAGE	VOLTAGE	CCT	FINISH	MOUNTING	CONTROL
WSD LED INC	**FI** Flood Light Series	**03W -** (30W) **45W -** (45W) **07W -** (70W)	**27** (AC120-277V)	**40K -** (4000K) **50K -** (5000K)	**D** - (Dark Bronze) **W** - (White) **B** - (Black) **S** - (Silver)	**K -** (Knuckle) **T -** (Trunnion)	**P -** (Photocell)

LED Flood Light Series

Wattages: 30W, 45W, 70W

PHOTOMETRICS

WSD-FL03W27-50K

LUMINOUS INTENSITY DISTRIBUTION DIAGRAM

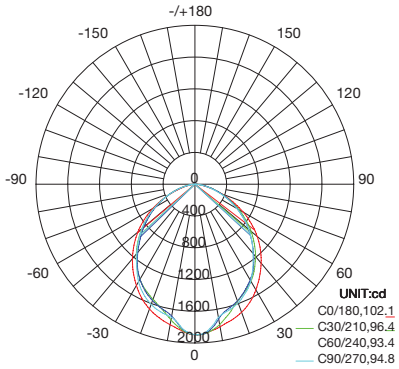

AVERAGE BEAM ANGLE(50%):96.7 DEG

C0 PLANE ISOLUX DIAGRAM (UNIT:lx)

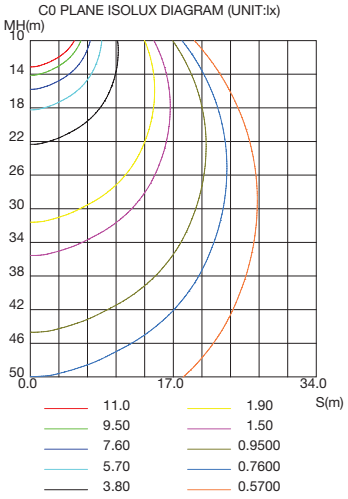

ISOLUX DIAGRAM

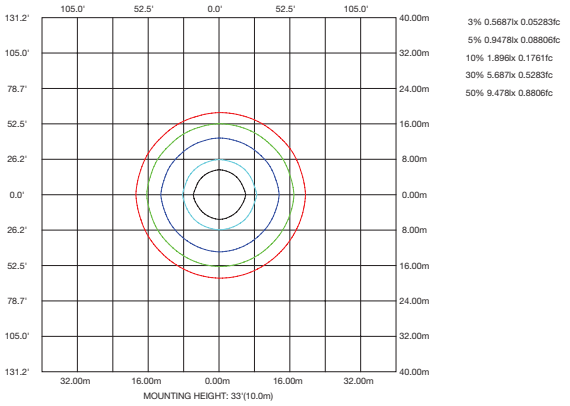

WSD-FL45W27-50K

LUMINOUS INTENSITY DISTRIBUTION DIAGRAM

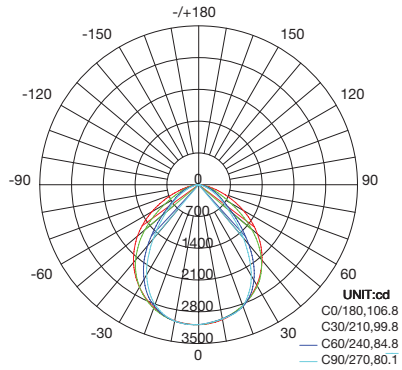

AVERAGE BEAM ANGLE(50%):92.9 DEG

C0 PLANE ISOLUX DIAGRAM (UNIT:lx)

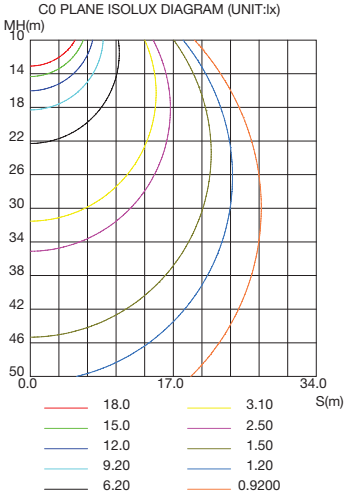

ISOLUX DIAGRAM

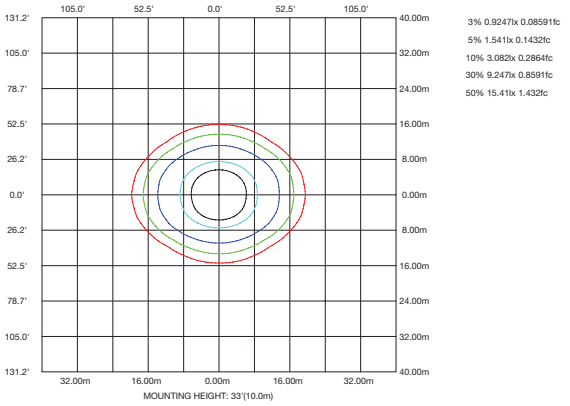

WSD-FL07W27-50K

LUMINOUS INTENSITY DISTRIBUTION DIAGRAM

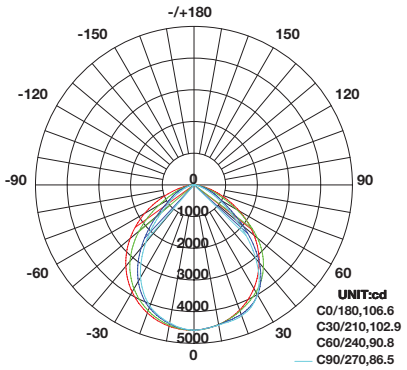

AVERAGE BEAM ANGLE(50%):96.7 DEG

C0 PLANE ISOLUX DIAGRAM (UNIT:lx)

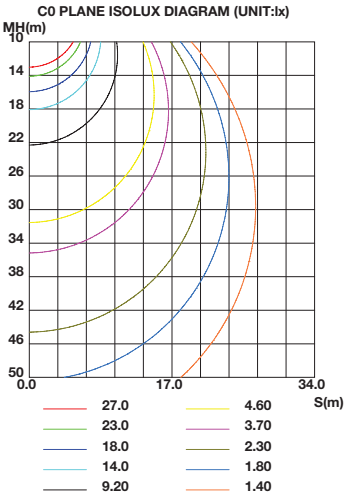

ISOLUX DIAGRAM

