Installation Instruction

⚠ WARNING

- To reduce the risk of death, personal injury or property damage from fire, electric shock, falling parts, cuts/abrasions, and other hazards read all warnings and instructions included with and on the fixture box and all fixture labels.
- Before installing, servicing, or performing routine maintenance upon this equipment, follow these general precautions.
- Commercial installation, service and maintenance of luminaires should be performed by a qualified licensed electrician.
- For the installation: If you are unsure about the installation or maintenance of the luminaires, consult a qualified licensed electrician and check your local electrical code.
- To prevent wiring damage or abrasion, do not expose wiring to edges of sheet metal or other sharp objects.
- Do not make or alter any open holes in an enclosure of wiring or electrical components during kit installation.

⚠ WARNING

- Turn off electrical power at fuse or circuit breaker box before wiring fixture to the power supply.
- Turn off the power when you perform any maintenance.
- Verify that supply voltage is correct by comparing it with the luminaire label information.
- All wiring connections should be capped with UL approved wire connectors.

⚠ CAUTION

- Avoid direct eye exposure to the light source while it is on.
- Account for small parts and destroy packing material, as these may be hazardous to children.
- Risk of burn. Disconnect power and allow fixture to cool before changing bulb or handing fixture.

NOTICE: Green ground screw provided in proper location.Do not relocate.
NOTICE: Minimum 90°C supply conductors.
NOTICE: Specifications and dimensions subject to change without notice.
NOTICE: Suitable for wet location.

General Wiring Diagram

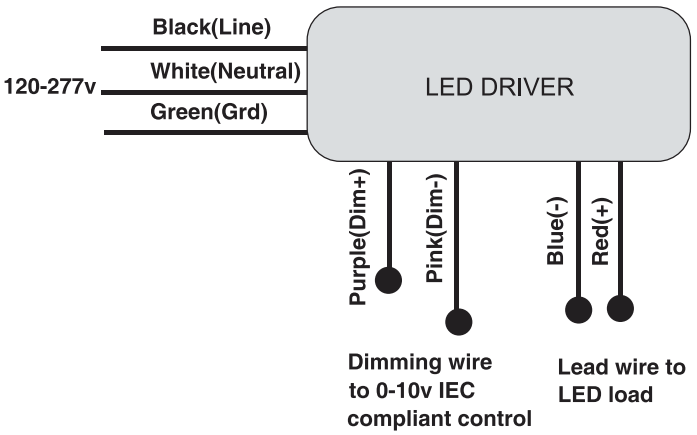

Installation Instruction

INSTRUCTIONS:

Always turn off the power supply from main circuit breaker first!

Hardware Content

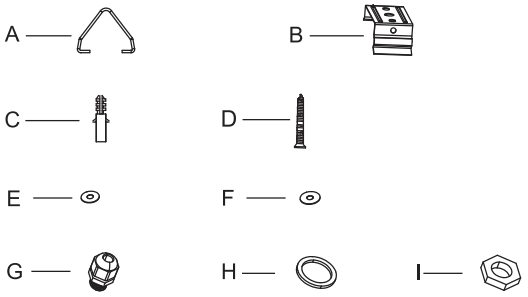

	CONTENTS	2ft/4ft	8ft
A	V-HOOK	2	3
B	SURFACE MOUNT BRACKET	2	3
C	PLASTIC TUBE-6*31mm	2	3
D	SELF-DRILLING SCREW-4*32*7	2	3
E	METEL GASKET-4*12*0.7	2	3
F	RUBBER GASKET-4*12*1	2	3
G	PLUG	1	1
H	SEALING RING	1	1
I	NUT	1	1

A:Surface Mounting

1. Release latches by pulling top of latch away from housing. Detach LED tray and lens from fixture.

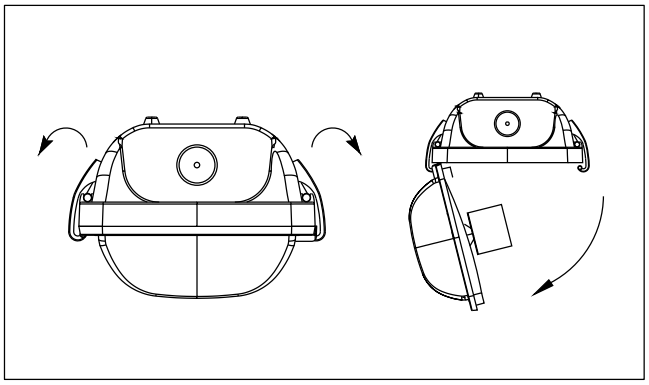

2. Connect an appropriate length of power cord to driver as shown in below figure[1]. (the flexible cord supplied by others)

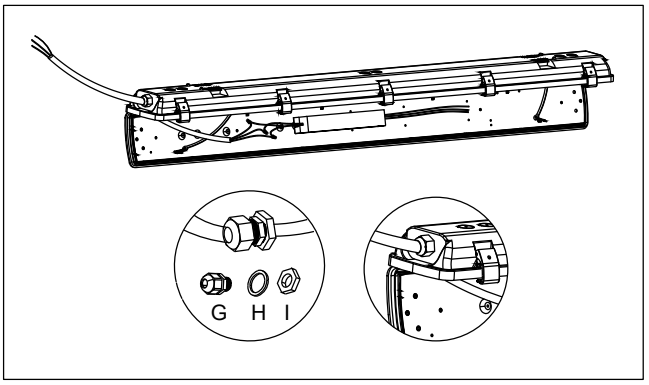

3.Reattach LED tray and lens to fixture by reversing step 1.

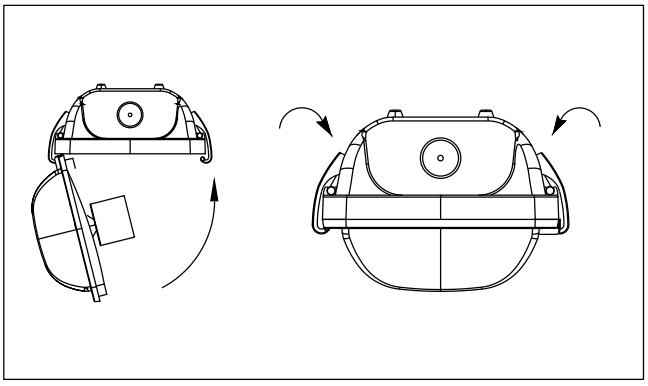

4.Locate and drill holes, then install clips to the ceiling surface using hardware found in hardware kit.

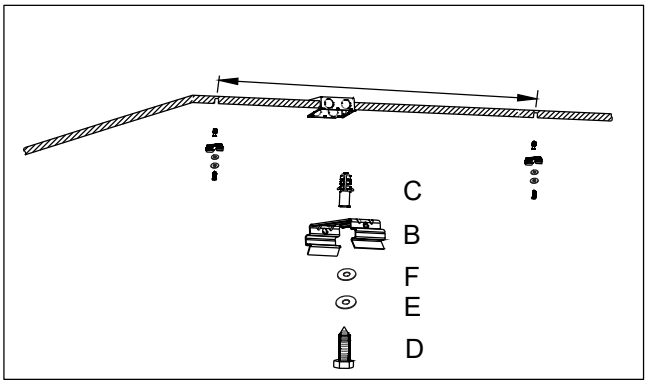

Installation Instruction

5.Connect fixture to AC power refer to General Wiring Diagram.

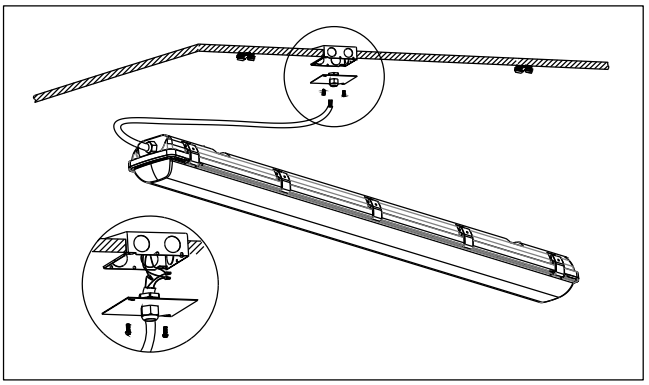

6.Press fixture housing to the clips until both sides of the housing recesses are secured.

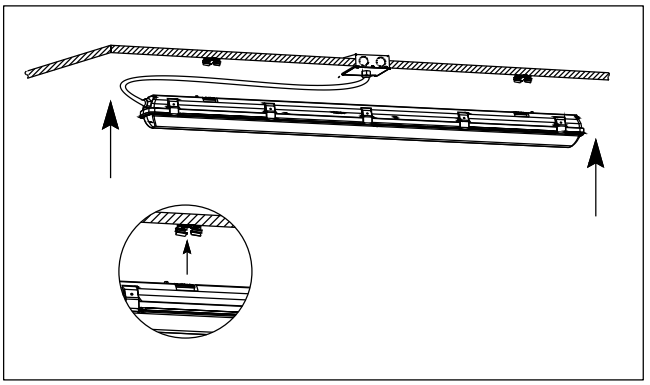

B: Chain Suspended Mounting

1. Release latches by pulling top of latch away from housing. Detach LED tray and lens from fixture.

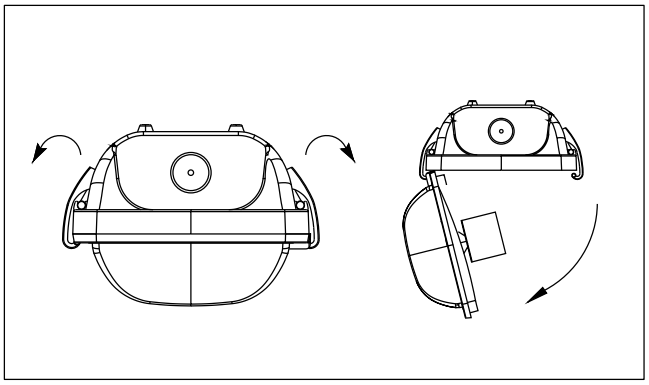

2. Connect an appropriate length of power cord to driver as shown in below figure[1]. (the flexible cord supplied by others)

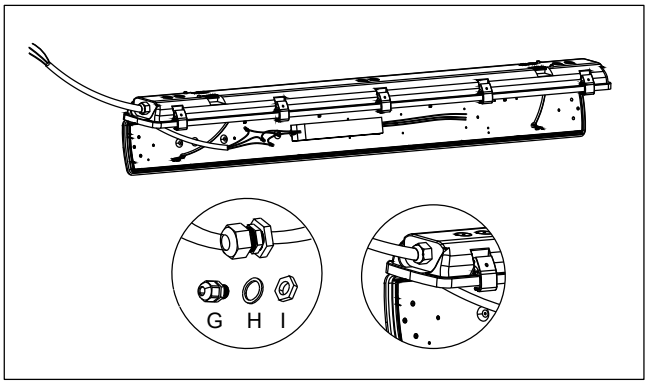

3. Secure mounting clips to fixture housing recesses by firmly pressing them into place, then attach V-hooks to each mounting clip.

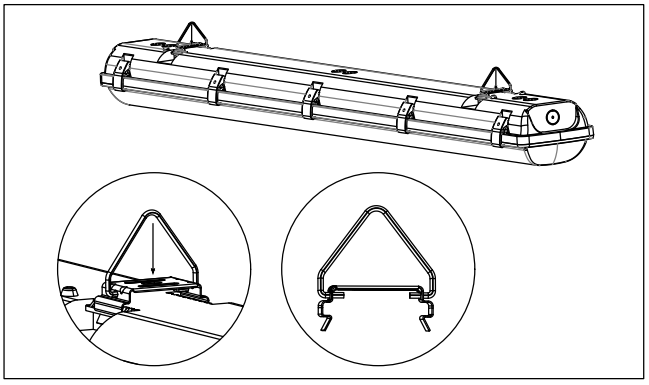

4. Hang the fixture by attaching the V-hooks to chains. Make wiring connection to Power supply accord to local laws and regulations.

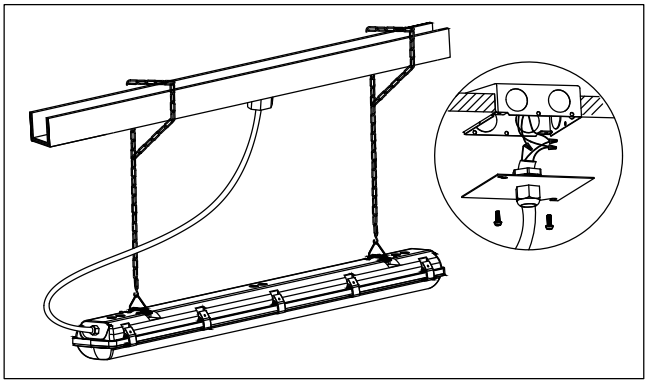

Note:

[1] Connect the flexible cord (SJTW 18AWG,not included) to the driver input wires.Be sure to connect the wet location rated strain relief(included)to the side-hole of the housing.

Installation Instruction

C: Boom installation

1.Insert the boom into the hole of boom bracket and fix with a nut.

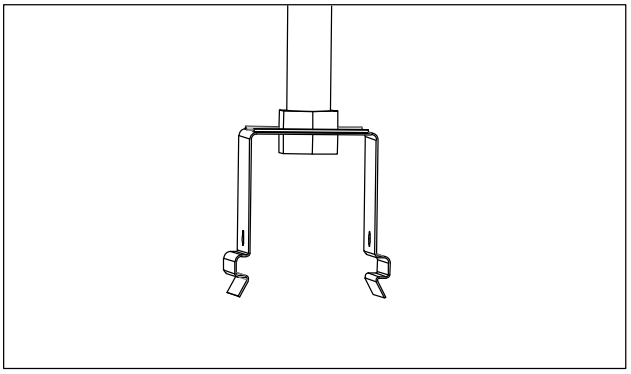

2. Secure mounting clips to housing recesses by firmly pressing them into place until both sides of the clip are secured.

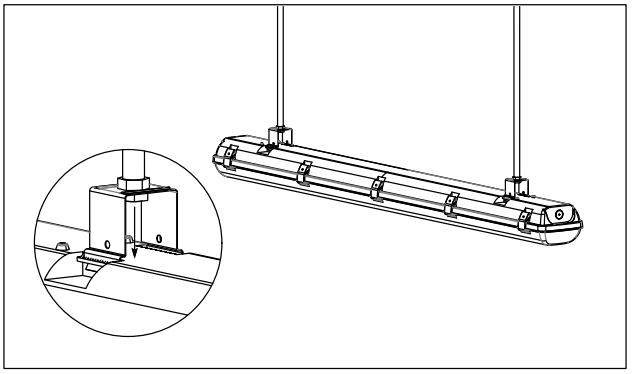

3. Insert the long screw into the hole on the side of the boom bracket and screw the nut on. Tighten the nut so that the support does not fall off.

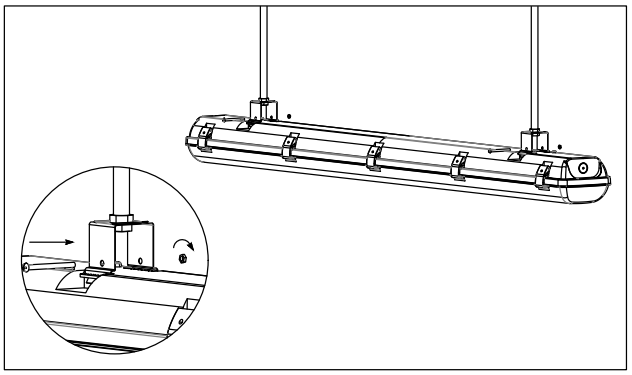

4.Release latches by pulling top of latch away from housing.

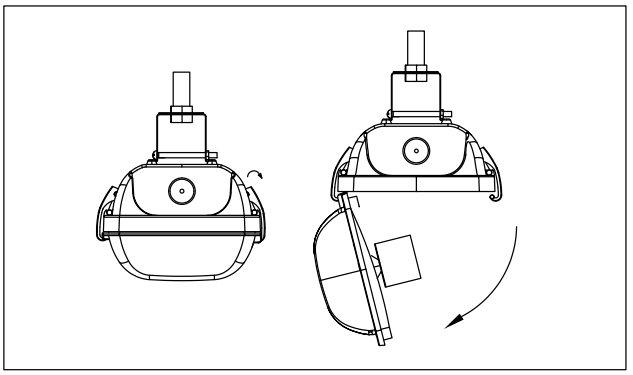

5. Connect an appropriate length of power cord to driver as shown in below figure. (the flexible cord supplied by others)

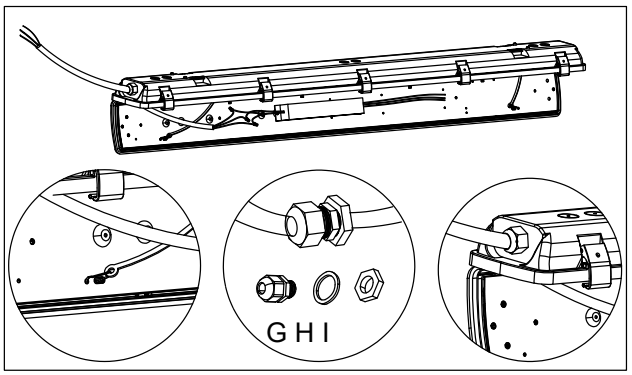

6.Follow general wiring Diagram for reference.Make sure the power supply is disconnected before installing.

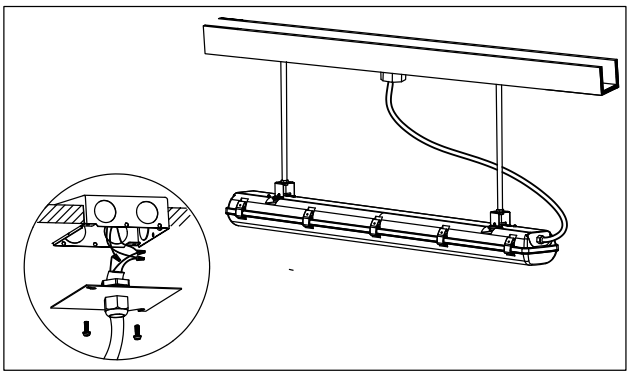

Note:

[1] Connect the flexible cord (SJTW 18AWG,not included) to the driver input wires.Be sure to connect the wet location rated strain relief(included)to the side-hole of the housing.

Installation Instruction

Field-Adjustable Wattage & CCT

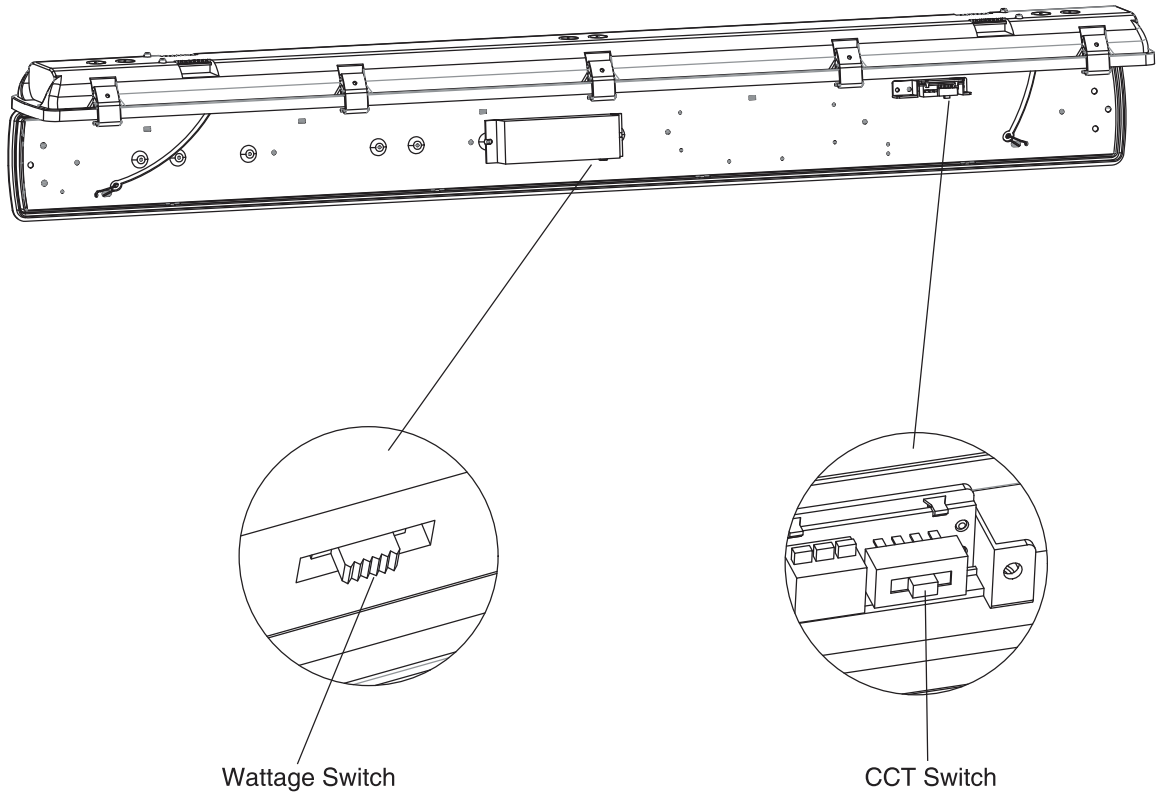

The end users may adjust the color temperature and lumen output respectively by the two DIP switch.Each DIP switch is accommodated with 3 options (left, middle and right),corresponding to 3 color temperatures and 3 powers respectively, which can perform the desired color temperature and lumen output combination.

1.DIP switches are located onto the side of the fixture.

2.Select a wattage and color temperature by sliding switch left or right respectively to the desired value.

Installation Instruction

Additional Accessories

- Standalone DC Sensor

1. Release latches by pulling top of latch away from housing.Detach integrated light-part(LED tray and lens) from fixture.

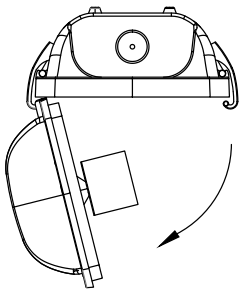

2.Remove the sensor cover from the LED tray.

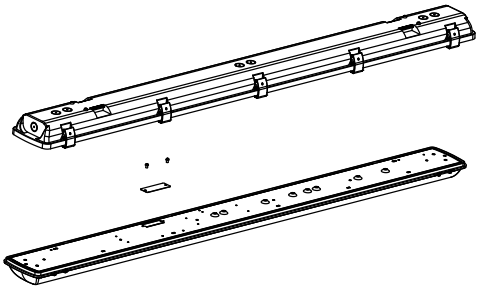

3.Connect the dimming wires and 12V AUX wire to the approved sensor.

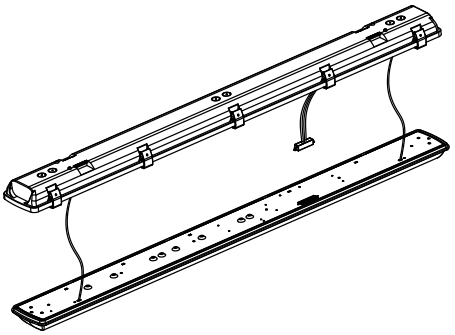

4.Install the sensor into the prepunched hole.Reattach LED tray and lens to fixture by reversing step 1,then fasten the latches back firmly.

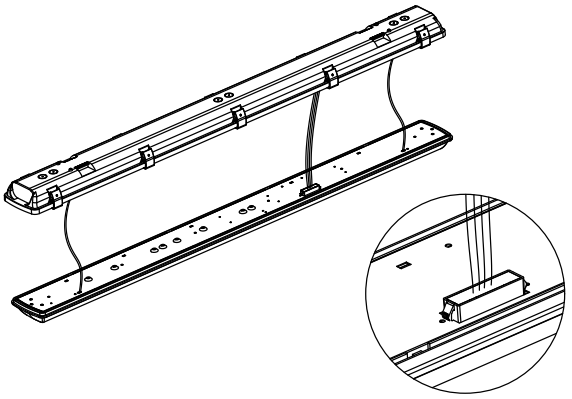

General Wiring Diagram

