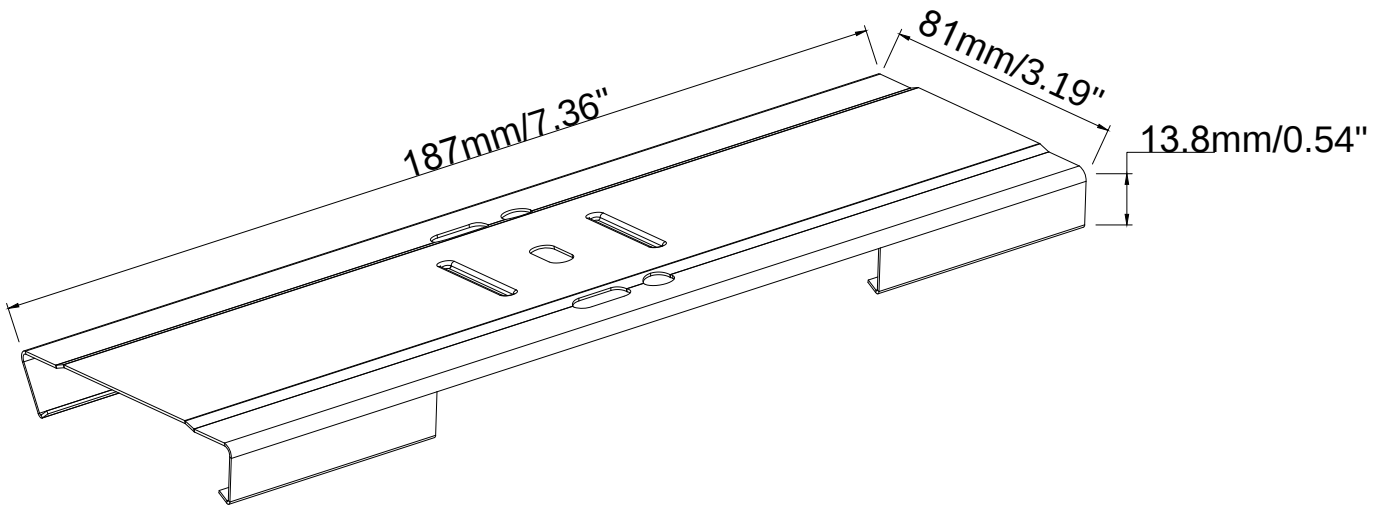
187mm/7.36"
81mm/3.19"
13.8mm/0.54"