LED Linear High Bay CCT Selectable Series

WSD LED INC
Green Lighting Resources

Wattage: 85W,130W, 170W, 255W, 300W, 400W

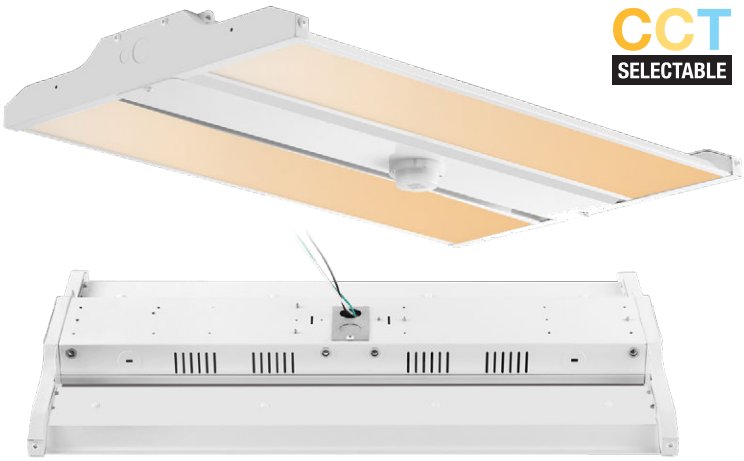

The Linear High Bay with its all-in-one, lightweight and slim with multiple mounting situations available put it at the top of the list for any high ceiling area where super bright light is needed. The LED Linear High bay Light Series can be widely used for indoor excellent for warehouse, industry building, factories, fitness center, and many other applications.

Lighting controls meet design lights consortium (DLC) networked lighting control system technical requirements, LLLC, Energy Monitoring and High End Trim function.

MESH RANGE	60ft node-to-node and 500ft node-to-Gateway (Commissioning)

FEATURES

- Optical design, greatly improved the light utilization an evenness.
- High efficiency LED Driver, voltage AC120-277 and 277V-480V.
- Rugged galvanized rolled iron plate housing, better cooling, light quality, LED Tj < 85°C.
- 0-10V dim to 10%.
- 12Vdc auxiliary dimming
- Field install plug and play Bi-Level Sensor.

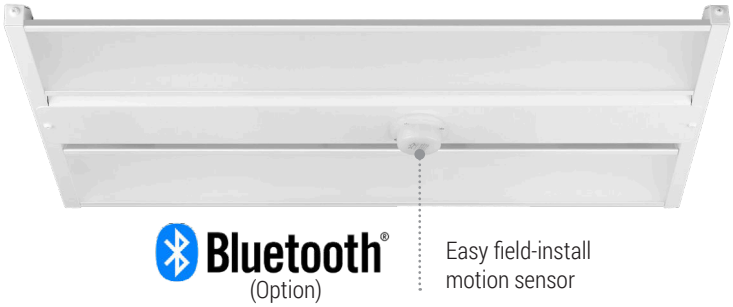

SPECIFICATION						
WATTAGE	85W	130W	170W	255W	300W	400W
LUMEN	11475 lm	17680 lm	23120 lm	34680 lm	40800 lm	54000 lm
EFFICACY	135 lm/W	135 lm/W	136 lm/W	136 lm/W	136 lm/W	135 lm/W
CCT	4000K/5000K					
CRI	80					
INPUT VOLTAGE	AC120-277V and 277V-480V					
LIGHT ANGLE	105°					
POWER FACTOR	0.98					
DRIVER EFFICACY	90%					
FACTORY SETTINGS	4000K					
LIFE SPAN	over 75,000 hrs					
WORKING TEMPERATURE	-22°F ~ 113°F					
STORAGE TEMPERATURE	-40°F ~ 176°F					
PROTECTION LEVEL	damp location					
CABLE	Input connect, No cable					
WARRANTY	5 year limited					

LED Linear High Bay CCT Selectable Series

WSD LED INC
Green Lighting Resources

Wattage: 85W,130W, 170W, 255W, 300W, 400W

DIMENSION

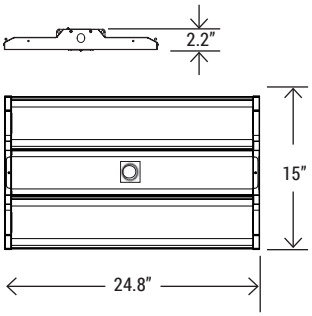

WATTAGE	85W, 130W, 170W
GR. WEIGHT	10.36 lbs/11.24 lbs
BOX DIM.	25.9" x 15.4" x 2.6"

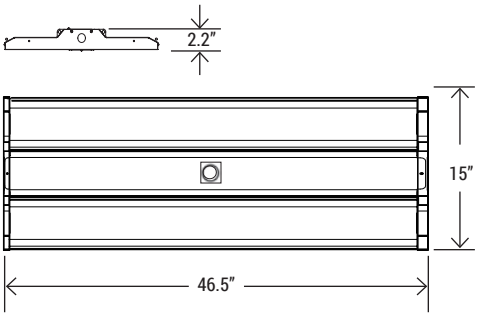

WATTAGE	255W
GR. WEIGHT	17.9 lbs
BOX DIM.	47.6" x 15.4" x 2.6"

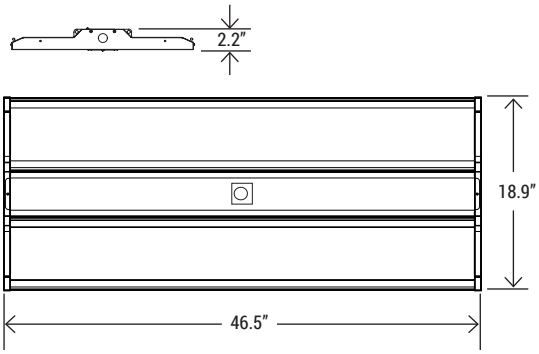

WATTAGE	300W, 400W
GR. WEIGHT	19.84 lbs
BOX DIM.	47.6" x 19.3" x 2.6"

EMERGENCY BACK-UP (SOLD SEPARATELY)



WSD-EMS15W27-XX
15W Emergency Backup Battery LED Driver
(Low voltage models only)



WSD-EMS20W27-XX
20W Emergency Backup Battery LED Driver
(Low voltage models only)

CONTROL (SOLD SEPARATELY)



Bluetooth
NLC-BT-MW-SR-001
Bluetooth Microwave Fixture Sensor
(Silvair Bluetooth)



Bluetooth
NLC-BT-MW-GE-001
Bluetooth Microwave Fixture Sensor
(GEBC Bluetooth)



NLC-MW-PT-002
Bi -level microwave Sensor



NLC-PIR-PT-001
Bi - Level PIR Motion Sensor



RC-100
Remote Controller
(With NLC-MW-PT-002 and NLC-PIR-PT-001 use)

*MESH RANGE	60ft node-to-node and 500ft node-to-Gateway (Commissioning)

ORDERING INFORMATION

EXAMPLE:

LHB-2F85W27-4050K-E[Blank,M]-GEN2 / LHB-2F170W48-4050K-E[Blank,M] / LHB-4F300W48-4050K-E[Blank,M]

LHB	2F	85W	27	4050K	E	GEN2
PRODUCT	SIZE	WATTAGE	VOLTAGE	CCT	CONTROL	UPDATE
LHB (Linear Hig Bay)	**2F** (2-foot) **4F** (4-foot)	**85W -** (85W) **130W -** (130W) **170W -** (170W) **255W -** (255W) **300W -** (300W) **400W -** (400W)	**27** (AC120-277V) **48** (AC277-480V) **(The high voltage are only 170W and 300W)**	**4050K -** (4000K/5000K)	**Motion Sensor**	**Second generation product** **(Low voltage models only)**

LED Linear High Bay CCT Selectable Series

WSD LED INC
Green Lighting Resources

Wattage: 85W,130W, 170W, 255W, 300W, 400W

WIRE GUARD (SOLD SEPARATELY)

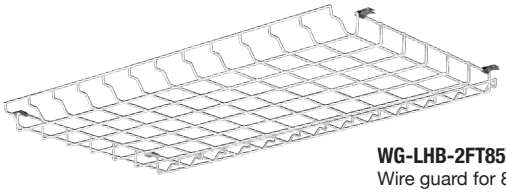

WG-LHB-2FT85W-130W-170W
Wire guard for 85W/130W/170W

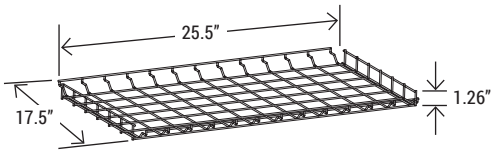

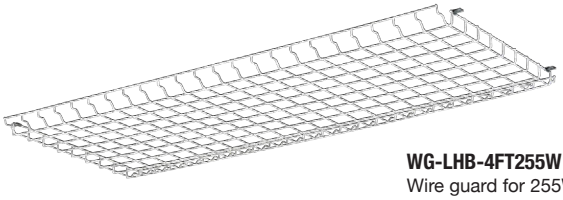

WG-LHB-4FT255W
Wire guard for 255W

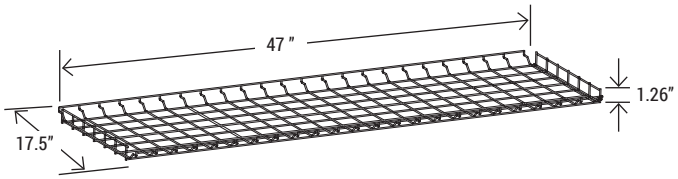

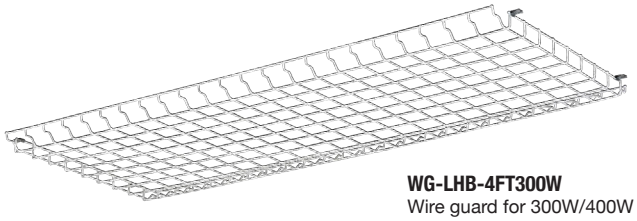

WG-LHB-4FT300W
Wire guard for 300W/400W

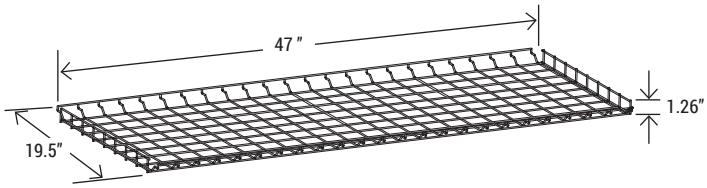

INCLUDED IN THE PACKAGE

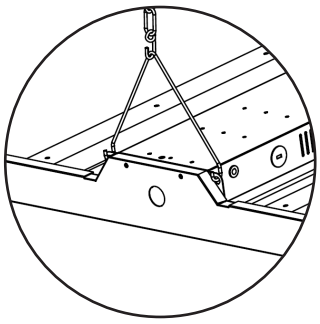

CHAINS/HOOK

MOUNTING OPTION

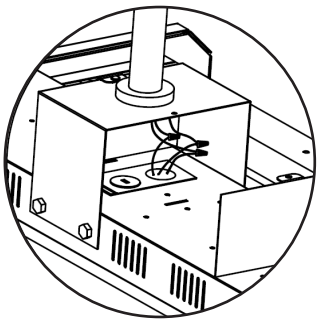

J-BOX OPTION

SURFACE MOUNT KIT (SOLD SEPARATELY)

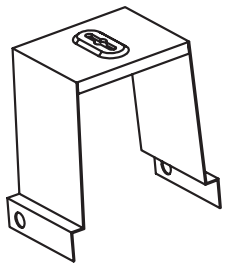

SURFACE MOUNT KIT-LHBG2
Surface mount kit

LED Linear High Bay CCT Selectable Series

WSD LED INC
Green Lighting Resources

Wattage: 85W,130W, 170W, 255W, 300W, 400W

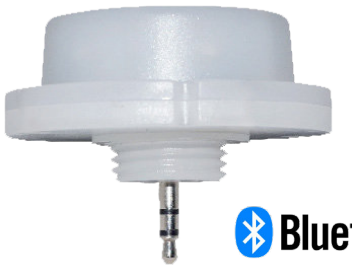

DIMENSION

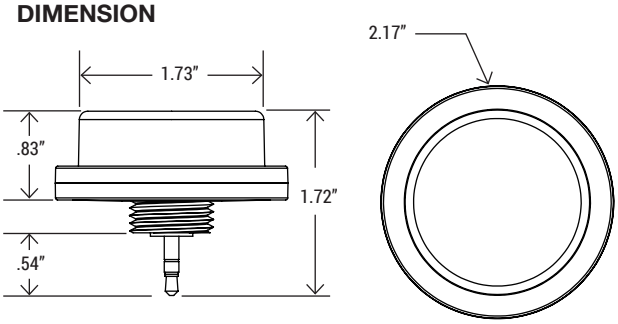

COVERAGE

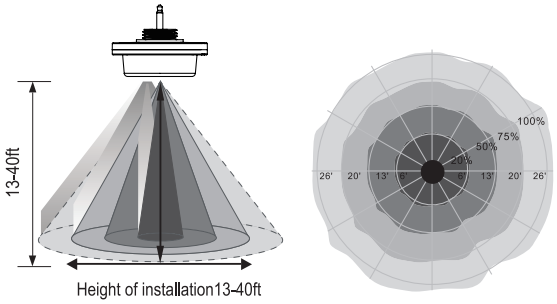

MICROWAVE SENSOR FEATURES	
DAYLIGHT HARVESTING	On/Off
MOTION SENSING	On/Off
FIRST TIME DELAY	1-59 mins/infinite
SECOND TIME DELAY	0-59 mins/infinite
DIM LEVEL	0-100%
MOUNTING HEIGHT	13-40ft
DETECTION RANGE	up to 52ft diameter
DETECTION: HORIZONTAL	360°
DETECTION: VERTICAL	90°

COMMISSIONING

Silvair iOS App makes it easy to pair devices, create groups, set scenes/schedules, customize dimming levels, and adjust high trim based on application needs.

ANT-5-4T-BLE-SR

Plug and Play Network BLE Nodes and Sensor

The Bluetooth Lighting Control provides automated individual and group control of light fixtures using on sensors and Bluetooth sigmesh technology. The ANT-5-4T-BLE-SR mounted in an Commercial lighting fixture and provides multi-level control solution based on motion and or daylight harvesting contribution.

FEATURES

- Lighting controls meet design lights consortium (DLC) networked lighting control system technical requirements.
- Quick connect and adjust different sensor angle.
- Easy commissioning with Mobile App (Available in IOS).
- Bluetooth network with Saas working by computer
- Individual addressability and/or grouping.
- Time clock scheduling for individual lights, groups or scenes.
- Multi-level dimming: manual ON/OFF automatic ON/OFF, and automatic partial ON/OFF, daylight harvesting control capability.

SPECIFICATION	
NETWORK BLE MESH	Yes
DAYLIGHT HARVESTING	Yes
MICROWAVE MOTION SENSOR	Yes
DETECTION MODE	Occupancy/Vancancy/Bi-level in 1 Unit
OPERATING VOLTAGE	12-24V DC
OPERATING CURRENT	>50mA
SINKING CURRENT	max. 25mA
CONTROL OUTPUT	0-10V
RADIO FREQUENCY	2.4GHz ± 75MHz
WIRELESS STANDARD	BLE 5.0 MESH
PRORGRAMMING	Silvair iOS App (IOS)
CYBERSECURITY	UL
ENCRYPTION	AES 128-bit
MESH RANGE	60ft node-to-node and 500ft node-to-device (Commissioning)
SAFETY	cULus Listed
FCC	FCC
OPERATING TEMP.	-20°C - +60°C
IP RATING	IP65
WARRANTY	5 year limited

Silvair App

Please scan and download the app.

iOS

Operation Instruction:
https://youtu.be/8KWPK7z_Tng

LED Linear High Bay CCT Selectable Series

WSD LED INC
Green Lighting Resources

Wattage: 85W,130W, 170W, 255W, 300W, 400W

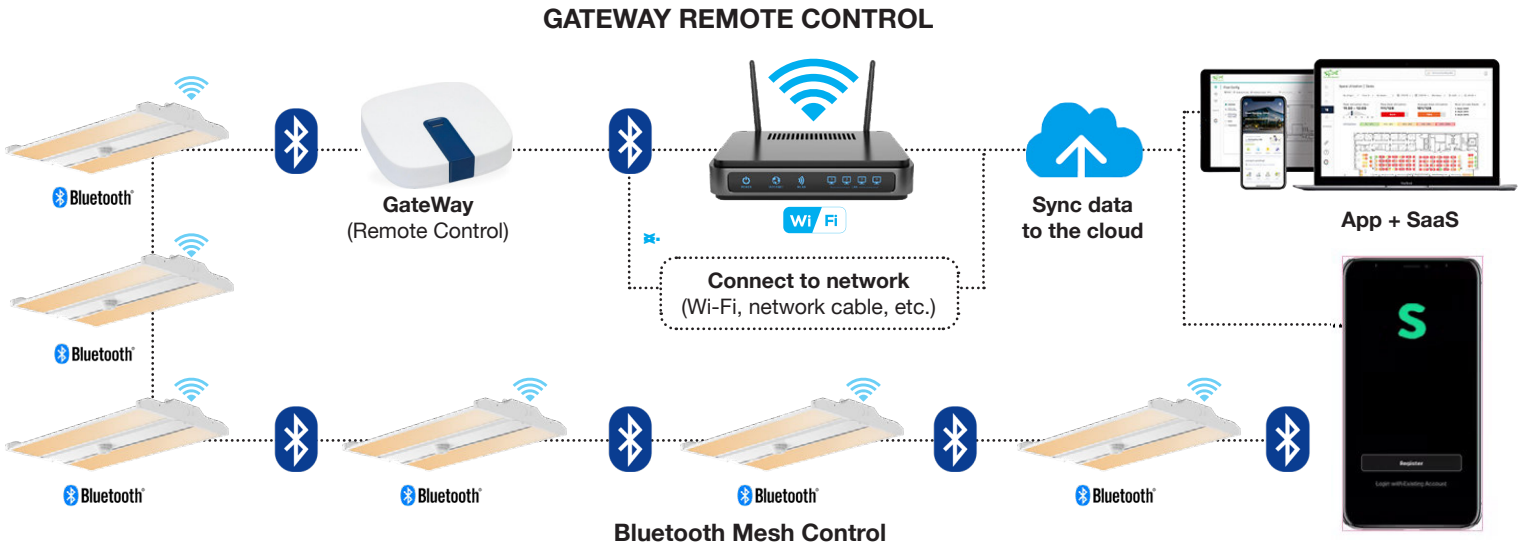



INDUSTRIAL GATEWAY

SGW-101
Smart Engineering Gateway

The Silvair Gateway connects Bluetooth mesh networks that have been commissioned using the Silvair Commissioning tools to the Silvair cloud. This allows the scheduling of events and delivery of services based on the data generated by these networks.

Functions:

The Silvair Gateway enables the following functions in the Silvair web app: ● Scheduling (available by default)
- ○Scheduling changes in scenes and lighting control scenarios (for example occupancy sensing,daylight harvesting) for specific times or days.

● Energyand occupancy monitoring (additional paid service)
- ○Visualizing energy use and occupancy via the Silvair web app.
- ○Downloading energy and occupancy via the Silvair web app and cloud-based API.

● Remote monitoring and control (additional paid service)
- ○ Low-latency monitoring of the status of devices in the network via API.
- ○ Low-latency control of devices in the network via API. ● System diagnostics
- ○ Monitoring of the status of Bluetooth mesh networks.
- ○ Remote troubleshooting of networking issues.

Features:

- ●Future-proof Linux operating system.
- ●Simple commissioning using the Silvair Commissioning tools.
- ●Automatic connection to the Silvair cloud.
- ●Secure provisioning with secure IDs and encrypted keys.
- ●High level of hardware and software security (secure boot and encrypted file system can only be accessed with the management platform).
- ●Automatic security updates.
- ●Prompt releases of OS updates and fixes to vulnerabilities.
- ●Low-latency transfer of network, luminaire, and sensor status data to the Silvair cloud.
- ●Schedule caching.
- ●Automatic remote firmware updates.
- ●Display of gateway and network performance metrics (requires the Silvair web app).

SPECIFICATION	
POWER SUPPLY	4.5–5.5 V DC, 2 A Power over Ethernet 36–57 V DC (IEEE 802.3af)
OPERATING SYSTEM	Ubuntu Core
PROCESSOR	i.MX6ULL (Y2), 32-bit ARM 800 MHz
MEMORY	512 MB DDR3L SDRAM 8GB eMMC
COMMUNICATION PROTOCOLS	Bluetooth mesh (2.4 GHz Bluetooth Low Energy) Wi-Fi 802.11a/b/g/n/ac (2.4/5 GHz) 4G LTE Cat 1 with 2G/3G (only for Cascade-500-W and Cascade-500-X gateways)
PORTS	1 x RJ45 10/100 Ethernet 1 x USB 2.0 Type-A 2 x external dipole antenna, 5 dBi (only for Cascade-500-W and Cascade-500-X gateways)
REQUIRED AMBIENT TEMPERATURE	0°C to 60°C 32°F to 140°F
ENCLOSURE DIMENSIONS	127 mm x 127 mm x 30 mm (5 inch x 5 inch x 1.2 inch)
MOUNTING POSITION	Wall or surface mounted. As close to the geometrical center of the lighting network as possible, but as far as possible from potential sources of interference.
SECURITY	Secure boot with encrypted operating system Secure communication with the Silvair Cloud over Internet (TLS) Secure communication with devices over qualified Bluetooth mesh

LED Linear High Bay CCT Selectable Series

WSD LED INC
Green Lighting Resources

Wattage: 85W,130W, 170W, 255W, 300W, 400W

PHOTOMETRICS

For complete IES files, please visit our website.

LHB-2F130W27-4050K

LUMINOUS INTENSITY DISTRIBUTION DIAGRAM

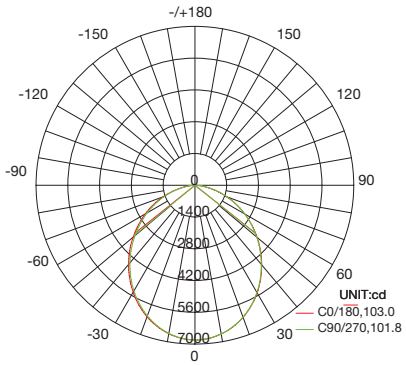

AVERAGE BEAM ANGLE(50%):102.4 DEG

C0 PLANE ISOLUX DIAGRAM (UNIT:lx)

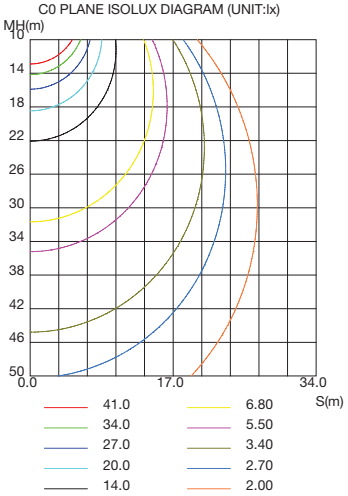

ISOLUX DIAGRAM

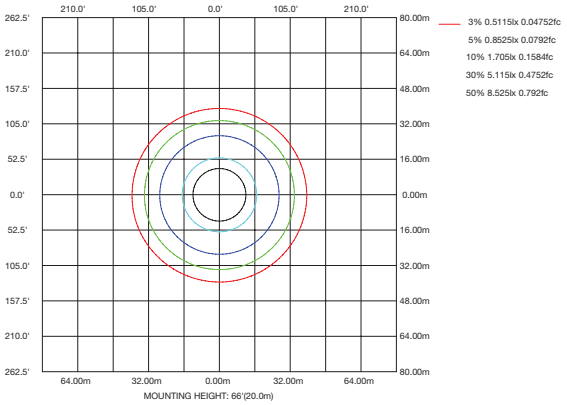

LHB-2F170W27-4050K

LUMINOUS INTENSITY DISTRIBUTION DIAGRAM

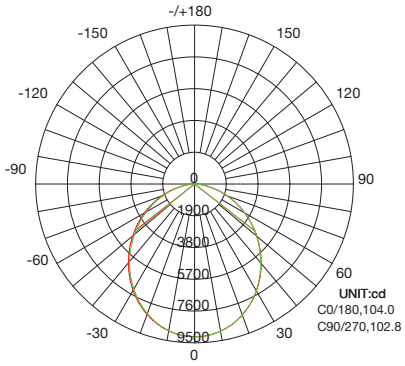

AVERAGE BEAM ANGLE(50%):103.4 DEG

C0 PLANE ISOLUX DIAGRAM (UNIT:lx)

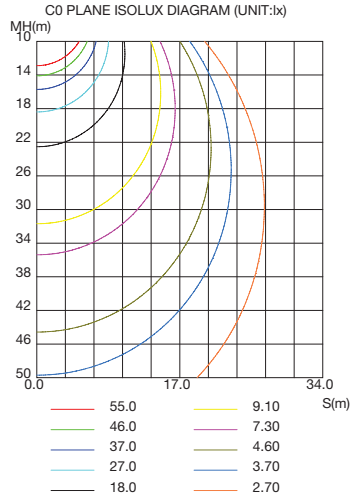

ISOLUX DIAGRAM

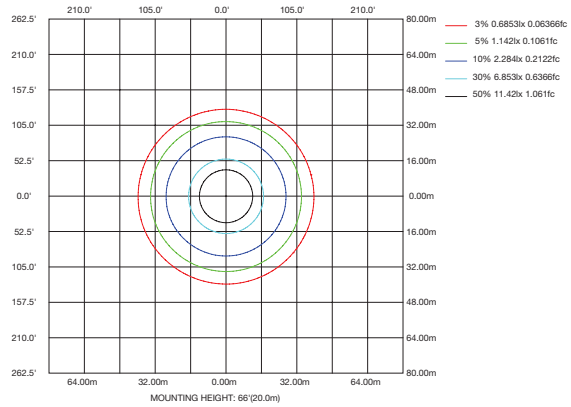

LHB-4F255W27-4050K

LUMINOUS INTENSITY DISTRIBUTION DIAGRAM

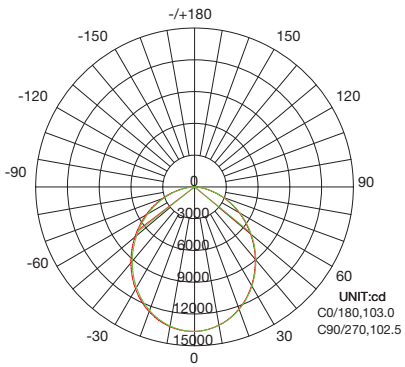

AVERAGE BEAM ANGLE(50%):102.8 DEG

C0 PLANE ISOLUX DIAGRAM (UNIT:lx)

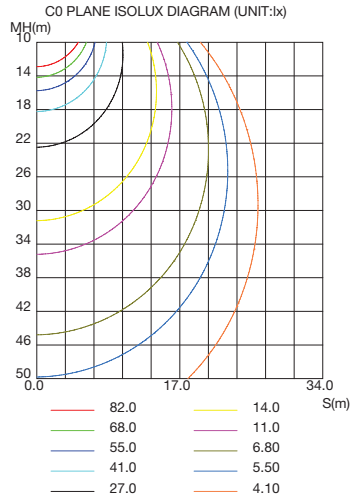

ISOLUX DIAGRAM

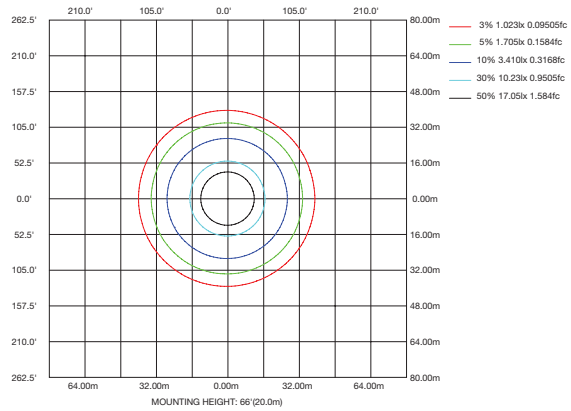

LED Linear High Bay CCT Selectable Series

WSD LED INC
Green Lighting Resources

Wattage: 85W,130W, 170W, 255W, 300W, 400W

PHOTOMETRICS

For complete IES files, please visit our website.

LHB-4F300W27-4050K

LUMINOUS INTENSITY DISTRIBUTION DIAGRAM

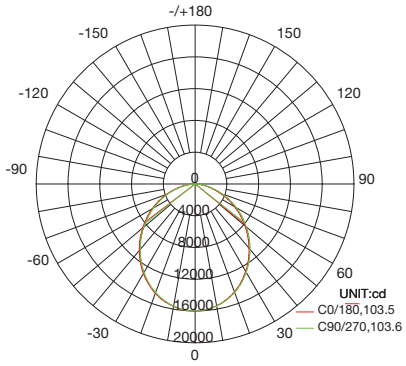

AVERAGE BEAM ANGLE(50%):103.6 DEG

C0 PLANE ISOLUX DIAGRAM (UNIT:lx)

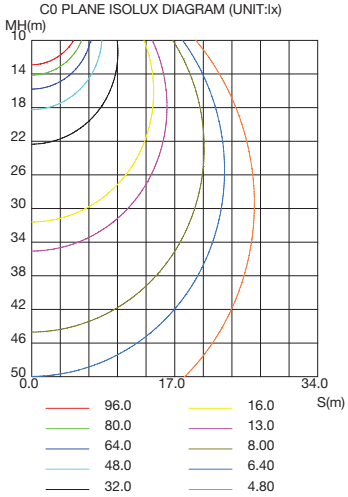

ISOLUX DIAGRAM

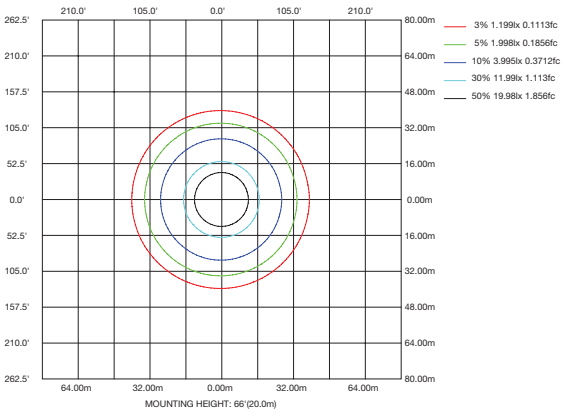

LHB-4F400W27-4050K

LUMINOUS INTENSITY DISTRIBUTION DIAGRAM

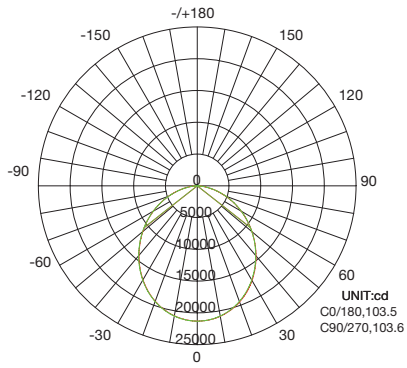

AVERAGE BEAM ANGLE(50%):103.6 DEG

C0 PLANE ISOLUX DIAGRAM (UNIT:lx)

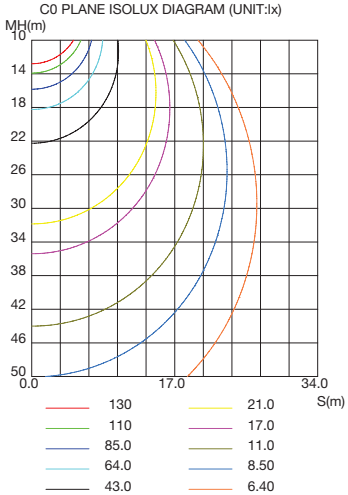

ISOLUX DIAGRAM

