# Installation guide

⚠ Notice

**PLEASE READ ALL INSTRUCTIONS BEFORE ATTEMPTING INSTALLATION**

— To prevent personal injury or product damage only licensed electricians should install.
— To avoid electric shock or component damage disconnect power before attempting installation or servicing.
— This product must be installed in accordance with the national electric code (NEC) and all applicable federal, state and local electric codes and safety standards.
— Disconnect product and allow cooling prior to servicing.
— Any alteration or modification of this product is expressly forbidden as it may cause serious personal injury, death, property damage and/or product malfunction.
— To prevent product malfunction and/or electrical shock this product must be properly grounded.
— This luminaire is designed to operate in ambient temperatures ranging from -30° c to 40° c and to be horizontally mounted with the LEDs facing down.

## Unpacking

Check the damage fixture thoroughly, Report to the carrier if goods damaged

## 1. Installation -

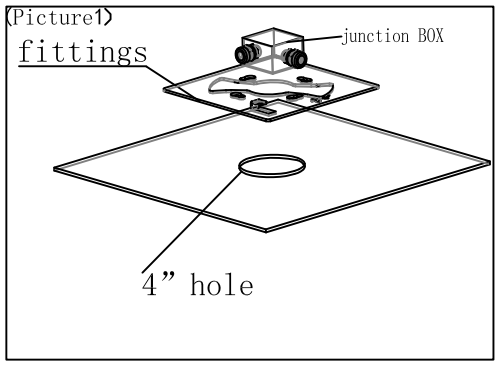


1. Place the parts on the ceiling (the ceiling is metal) and the four-inch round hole concentric. (see chart.)

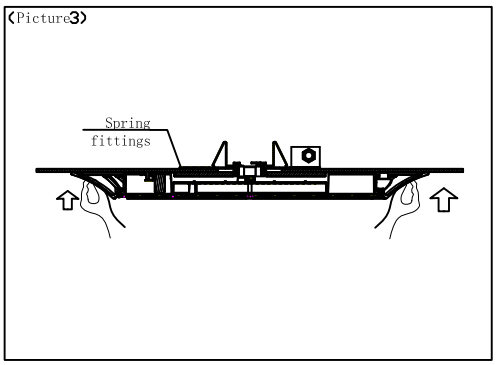


3. Install the assembled lamps to the ceiling. Use shrapnel to position the lamp on the ceiling and lock the screw fixtures. (see photo).

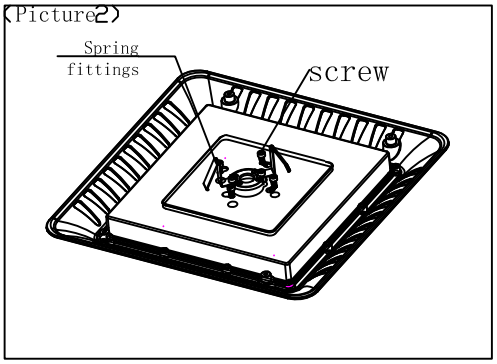


2. Put the shrapnel into the LED light, then tighten the shrapnel with two screws. (as shown in figure)

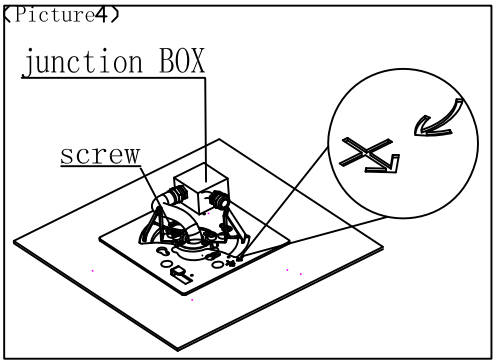


4. Turn the light clockwise and tighten the four screws to connect the power cord to the junction box. (see chart)

# Installation guide

⚠ Notice

**PLEASE READ ALL INSTRUCTIONS BEFORE ATTEMPTING INSTALLATION**

— To prevent personal injury or product damage only licensed electricians should install.
— To avoid electric shock or component damage disconnect power before attempting installation or servicing.
— This product must be installed in accordance with the national electric code (NEC) and all applicable federal, state and local electric codes and safety standards.
— Disconnect product and allow cooling prior to servicing.
— Any alteration or modification of this product is expressly forbidden as it may cause serious personal injury, death, property damage and/or product malfunction.
— To prevent product malfunction and/or electrical shock this product must be properly grounded.
— This luminaire is designed to operate in ambient temperatures ranging from -30° c to 40° c and to be horizontally mounted with the LEDs facing down.

## Unpacking

Check the damage fixture thoroughly, Report to the carrier if goods damaged

## 2. Installation

(Picture1)

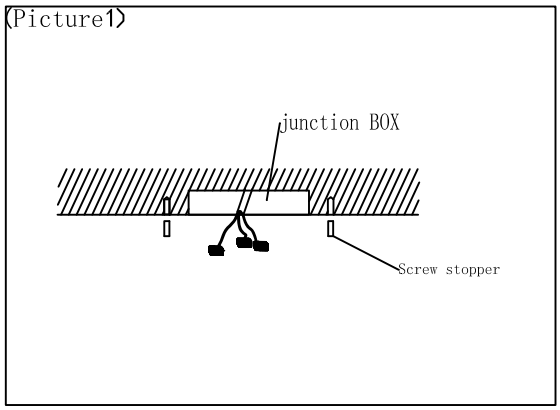


1. There is a four-inch junction box on the ceiling. And according to the mounting hole of the lamp, put the screw plug in the blossom board (using the screw plug according to the actual situation). (as shown in figure)

(Picture2)

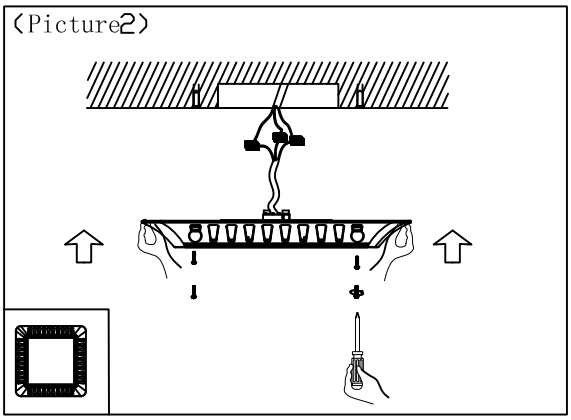

2. Lift up the lamp, connect the power cord to the ceiling, and tighten the four self-tapping screws. (see figure)。

# Installation guide

⚠ Notice

**PLEASE READ ALL INSTRUCTIONS BEFORE ATTEMPTING INSTALLATION**

— To prevent personal injury or product damage only licensed electricians should install.
— To avoid electric shock or component damage disconnect power before attempting installation or servicing.
— This product must be installed in accordance with the national electric code (NEC) and all applicable federal, state and local electric codes and safety standards.
— Disconnect product and allow cooling prior to servicing.
— Any alteration or modification of this product is expressly forbidden as it may cause serious personal injury, death, property damage and/or product malfunction.
— To prevent product malfunction and/or electrical shock this product must be properly grounded.
— This luminaire is designed to operate in ambient temperatures ranging from -30° c to 40° c and to be horizontally mounted with the LEDs facing down.

## Unpacking

Check the damage fixture thoroughly, Report to the carrier if goods damaged

## 3. Installation

1. Assemble conduit and wiring box to luminaire ( provided by others).
2. Seal 1/2” conduit threads preventing water entry into wireway.
3. Seal luminaire and screw penetrations through canopy deck preventing water leaking to bottom side of canopy.
4. Make wiring connections in wiring box.

