LED Gas Station Canopy Series

Wattages: 95W, 120W, 150W, 200W



150W / 200W



95W / 120W

LED Gas Station Canopy Light series can be widely used in indoor or outdoor lighting (wet location), excellent for gas station, museums, art galleries, shopping malls, parking garage, buildings, lawn, and many more applications.

FEATURES

- LED high luminous efficiency and long working life.
- High efficiency LED Driver, the wide range input voltage AC120-277V.
- Die-cast aluminum cooling design, high quality and better cooling for LED Tj < 85°C.
- Excellent optics design, greatly improve the light utilization and evenness.
- Motion sensor control available (Optional)

CONTROLS (SOLD SEPARATELY)



NLC-MW-SQ-006
Microwave Motion Sensor
(Sensing range: Approximately 40 Feet)



RC-100
Remote Controller

SPECIFICATION				
TYPE	WSD-CP95W27-50K-W-G3	WSD-CP12W27-50K-W-G3	WSD-CP15W27-50K-W-G2	WSD-CP20W27-50K-W-G2
WATTAGE	95W	120W	150W	200W
LUMEN	12721 lm	16086 lm	21250 lm	28390 lm
EFFICACY	≥130 lm/W	≥130 lm/W	≥140 lm/W	≥140 lm/W
CCT	4000K, 5000K			
CRI	70			
INPUT VOLTAGE	AC120-277V			
BEAM ANGLE	111°	109°	105°	
POWER FACTOR	0.95		0.98	
DRIVER EFFICACY	90%		93%	
DIMMING	1-10V dimming			
LIFE SPAN	over 50,000 hrs			
WORKING TEMPERATURE	-22°F ~ 113°F			
STORAGE TEMPERATURE	-40°F ~ 176°F			
OUTDOOR RATING	Wet location			
CABLE	Input Connect (27.56 inch)			
WARRANTY	5 year limited			

LED Gas Station Canopy Series

Wattages: 95W, 120W, 150W, 200W

Optical lens is made of high quality glass material to make the light even and soft.



High performance, die cast heat sink transfers heat from the light engine to the environment, via large cooling fins, drawing heat away from the fixture, and extending the lifespan of the LEDs.

DIMENSION

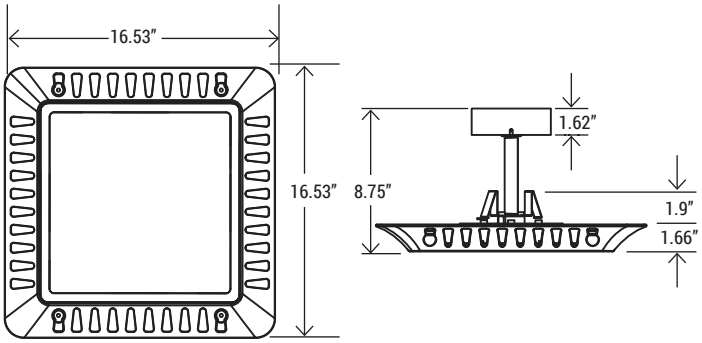

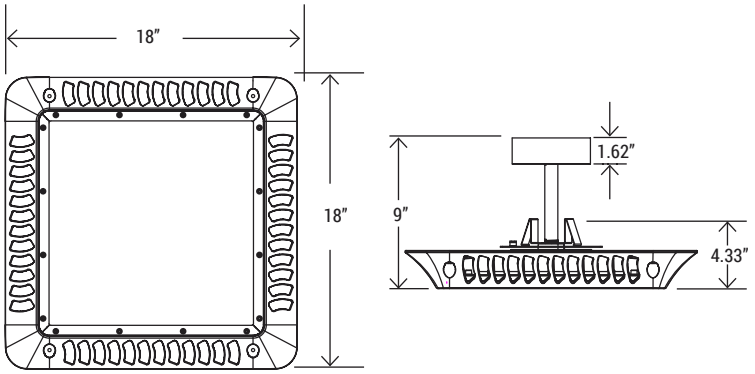

WATTAGE	95W, 120W
GR. WEIGHT	12.01 /12.32 lbs
BOX DIMENSION	17.13" x 17.13" x 4.13"

WATTAGE	150W, 200W
GR. WEIGHT	14.52 /14.78 lbs
BOX DIMENSION	18.7" x 18.7" x 4.92"

ORDERING INFORMATION

EXAMPLE:

WSD-CP95W27-XXK-Z[D, W, B, S]-E[BLANK, M]-G3/WSD-CP12W27-XXK-Z[D, W, B, S]-E[BLANK, M]-G3
WSD-CP15W27-XXK-Z[D, W, B, S]-E[BLANK, M]-G2/WSD-CP20W27-XXK-Z[D, W, B, S]-E[BLANK, M]-G2

WSD	CP	95W	27	XXK	Z	E
COMPANY	PRODUCT	WATTAGE	VOLTAGE	CCT	FINISH	CONTROL
WSD LED INC	**CP** (Gas Station Canopy)	**95W -** (95W) **12W -** (120W) **15W -** (150W) **20W -** (200W)	**27** (AC120-277V)	**40K -** (4000K) **50K -** (5000K)	**D -** (Dark Bronze) **W -** (White) **B -** (Black) **S -** (Silver)	**M -** (Motion Sensor)