Installation guide

⚠Notice

PLEASE READ ALL INSTRUCTIONS BEFORE ATTEMPTING INSTALLATION

— To prevent personal injury or product damage only licensed electricians should install.
— To avoid electric shock or component damage disconnect power before attempting installation or servicing.
— This product must be installed in accordance with the national electric code (NEC) and all applicable federal, state and local electric codes and safety standards.
— Disconnect product and allow cooling prior to servicing.
— Any alteration or modification of this product is expressly forbidden as it may cause serious personal injury, death, property damage and/or product malfunction.
— To prevent product malfunction and/or electrical shock this product must be properly grounded.
— This luminaire is designed to operate in ambient temperatures ranging from -30°c to 40°c and to be horizontally mounted with the LEDs facing down.

Unpacking

Check the damage fixture thoroughly, Report to the carrier if goods damaged

Install

①

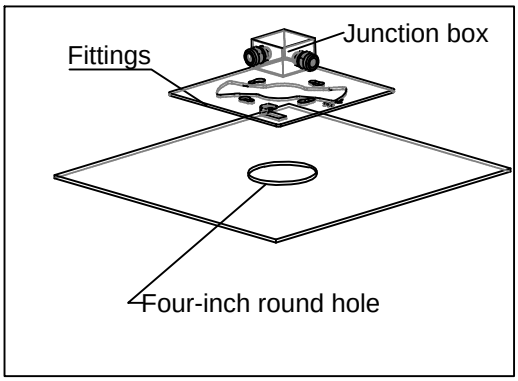

1. Place the installation board on the ceiling (the ceiling is metal) and keep the four-inch round hole concentric.

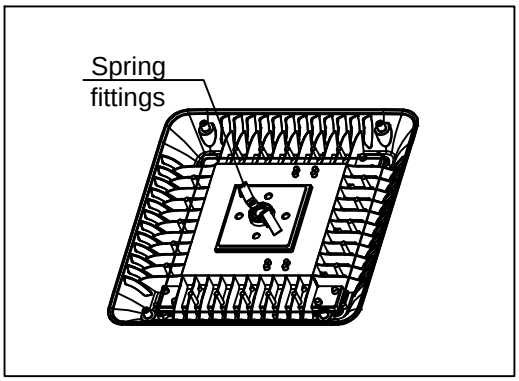

2. Put the shrapnel on the LED light, then tighten the shrapnel with two screws.

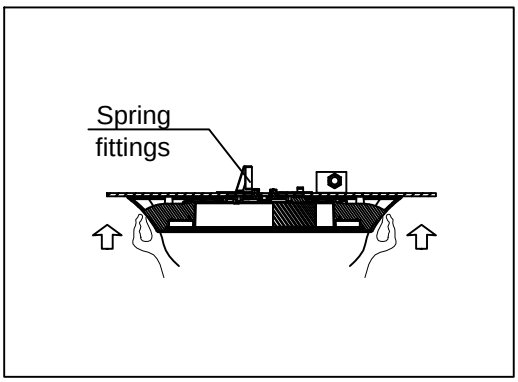

3. Install the assembled lamps to the ceiling. Use shrapnel to position the lamp on the ceiling and lock the fixtures.

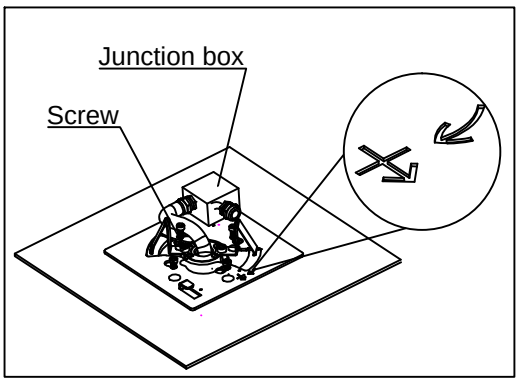

4. Turn installation board clockwise and tighten the four screws to connect the power cord to the junction box.

②

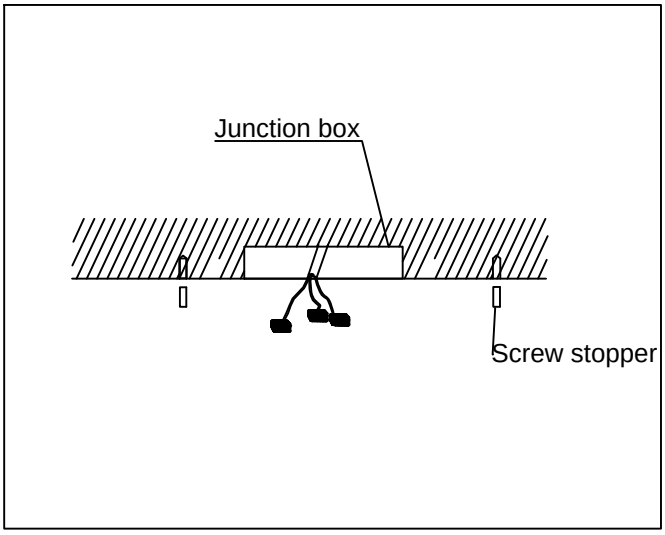

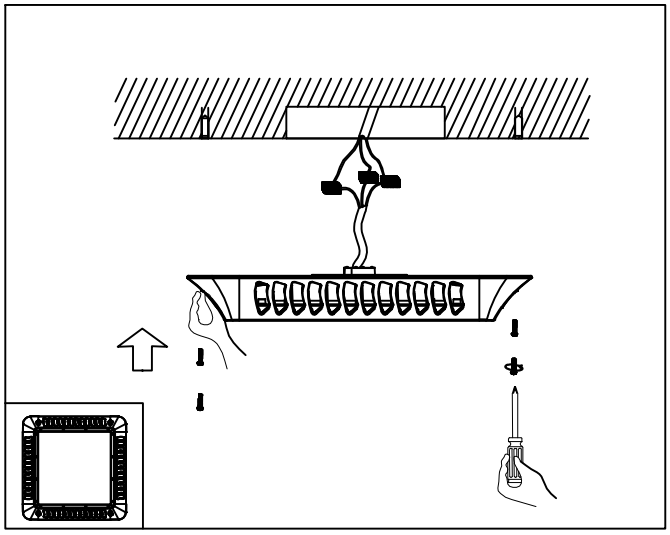

1. There is a four-inch junction box on the ceiling. And according to the mounting hole of the lamp,insert the rubber-plug into the ceiling (using the rubber-plug according to the actual situation).

2. Lift up the lamp, connect the power cord to the ceiling, and tighten the four self-tapping screws.

③ same as ①

1.Assemble conduit and wiring box to luminaire .
2.Seal 1/2" conduit threads preventing water entry into wireway.
3.Seal luminaire and screw penetration through canopy deck preventing water leaking to bottom.
4.Make wiring connections in wiring box

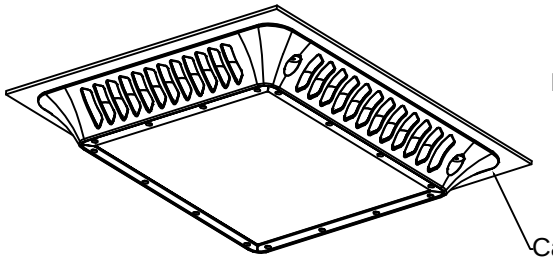

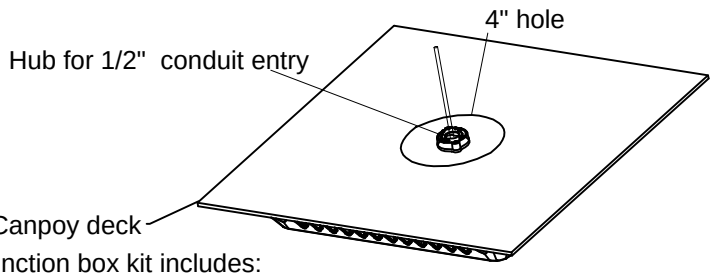

Junction box kit includes:

Junction box kit includes:

1.Junction box
2.Conduit nuts
3.1/2" Conduit

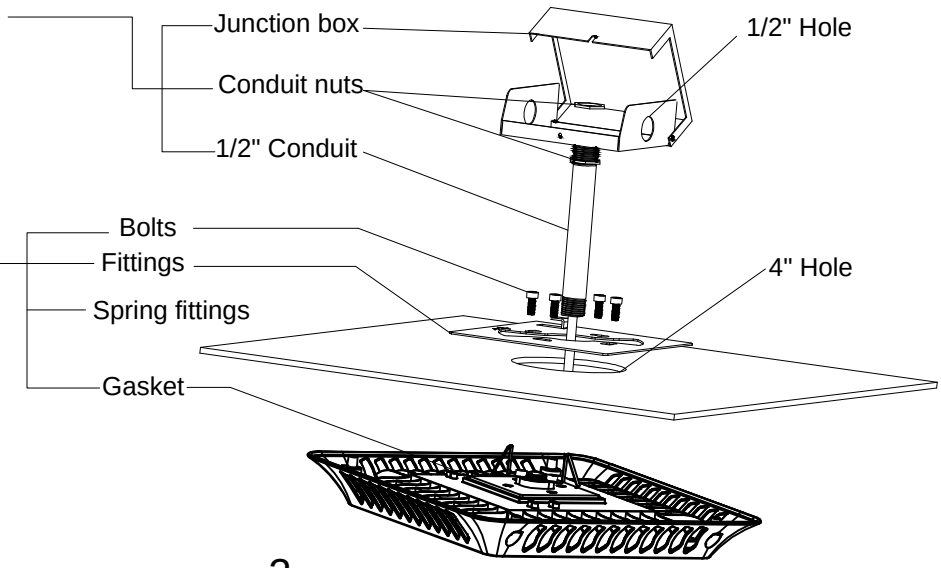

For ordering information, please contact sales@ilighting.com