Description of optical control accessories

Install

Step 1

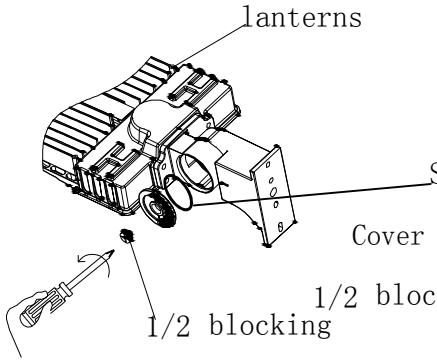

1. Remove the round cap on the luminaire and unscrew the 1/2 screw.

Step 2

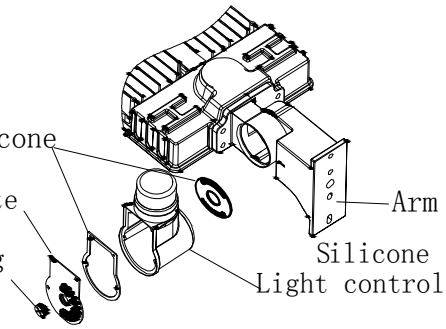

3. The lamp control terminal box is assembled according to the disassembly chart and is correctly connected with the AC power supply line. (as shown)

Step 3

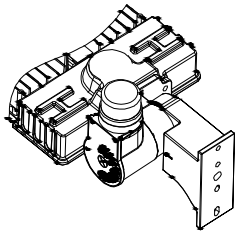

2. Remove the components of the light control junction box and install the light control junction box on the lamp (ARM installation mode).

Step 1

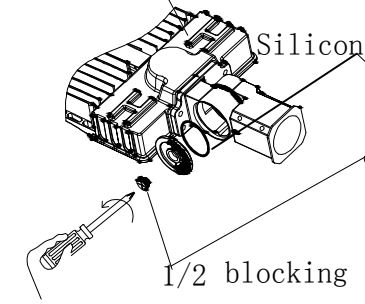

1. Remove the round cap on the luminaire and unscrew the 1/2 screw.

Step 2

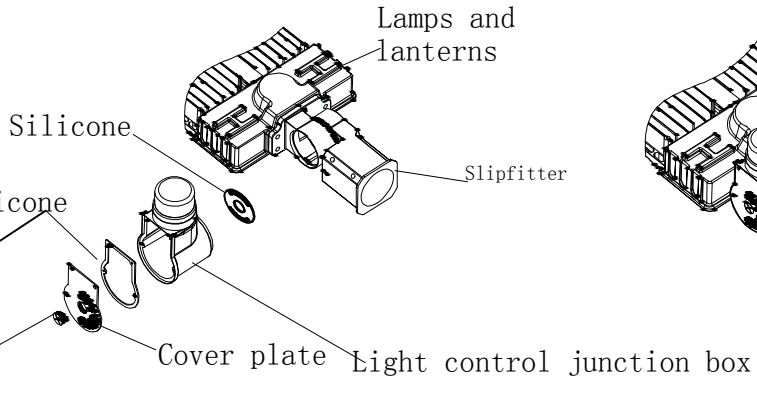

3. The lamp control terminal box is assembled according to the disassembly chart and is correctly connected with the AC power supply line. (as shown)

Step 3

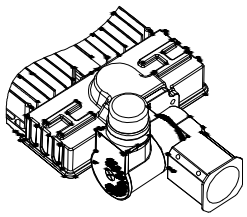

2. Remove the components of the light-controlled junction box and install the light-controlled junction box on the lamp (equipped with SLIPFITER installation mode).

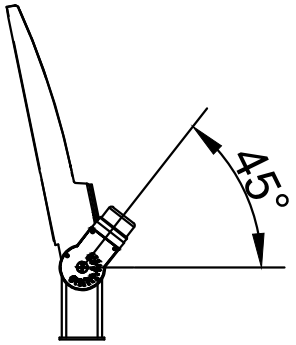

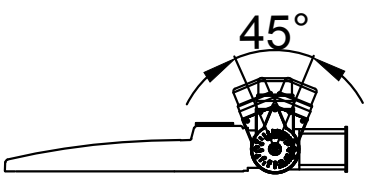

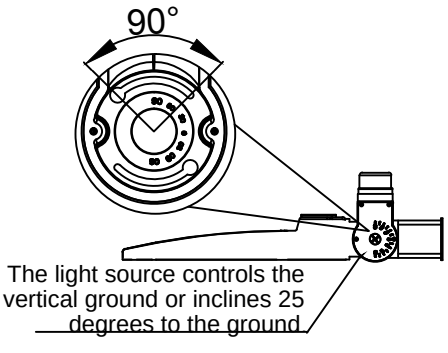

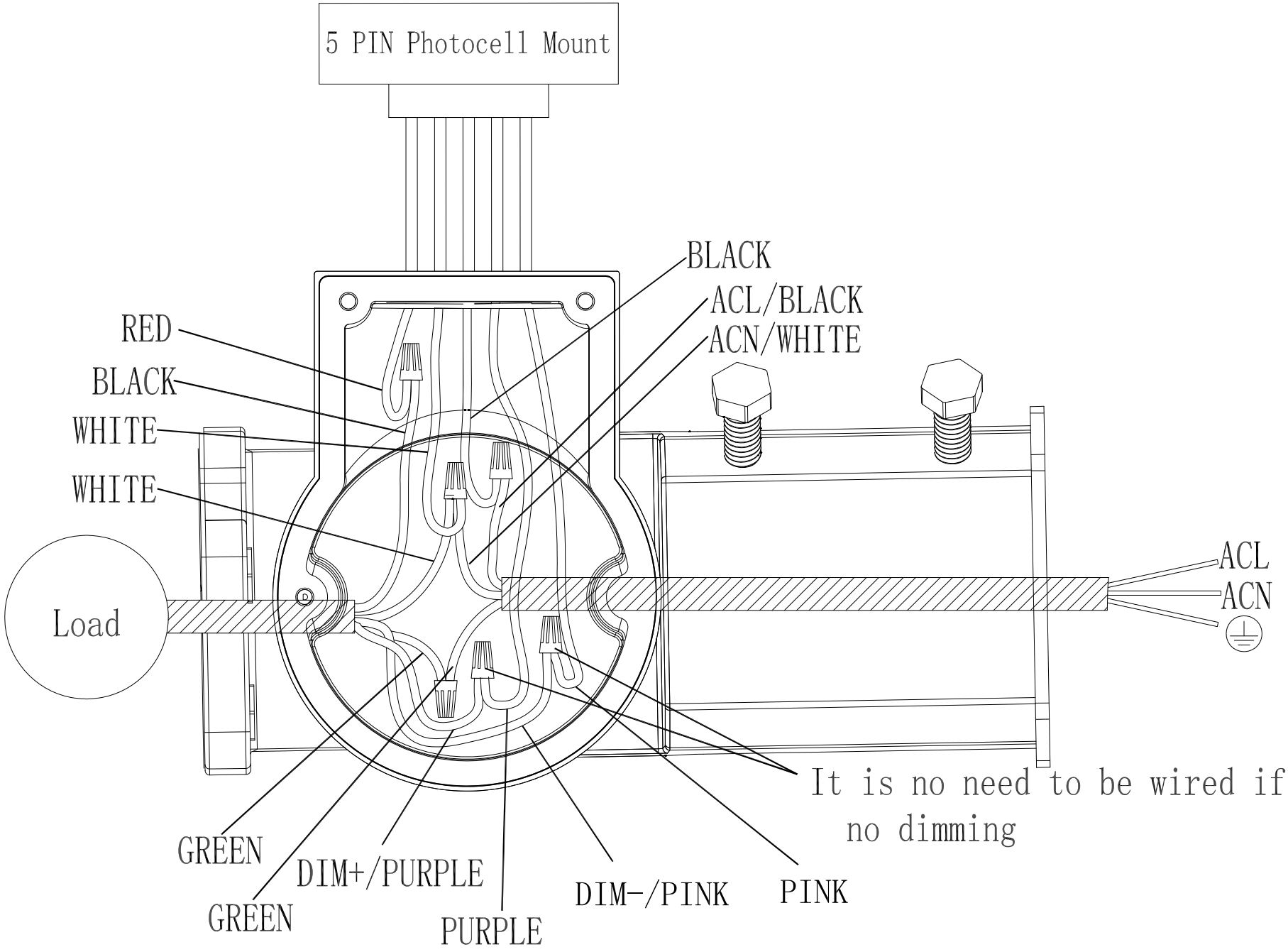

For ordering information, please contact sales@ilighting.com

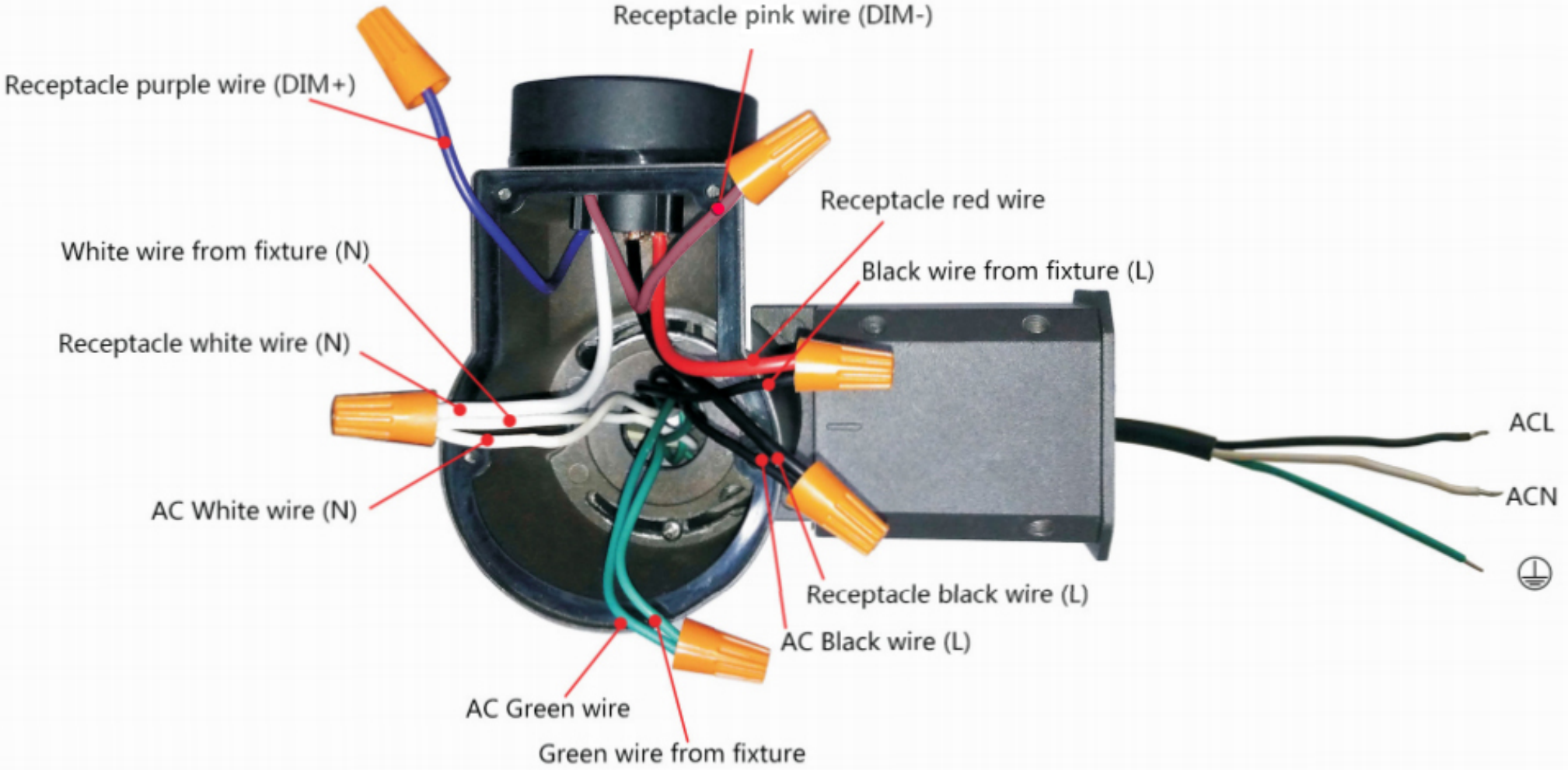

For ordering information, please contact sales@ilighting.com