Installation guide

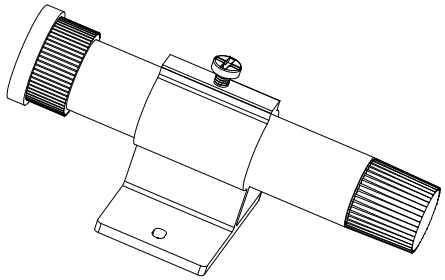

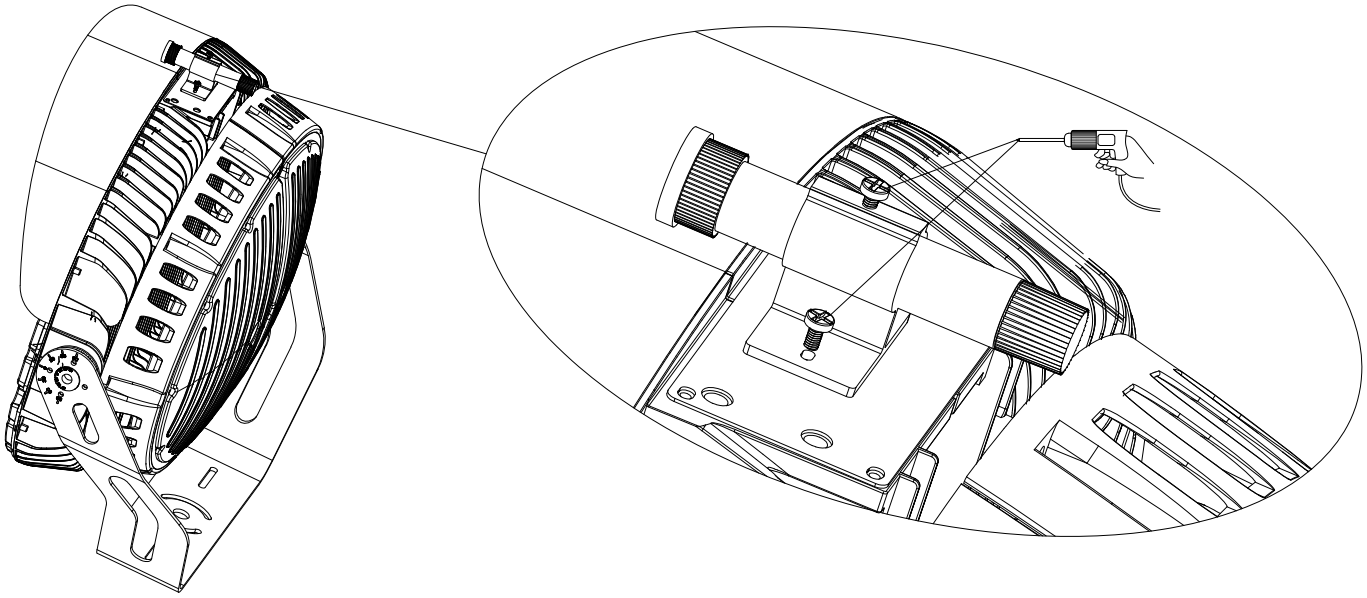

1.Take out the laser sight and fixing bracket and fix it as shown in the figure.

For ordering information, please contact