Selectable LED Area Light

WSD LED INC
Green Lighting Resources

Wattages: 60W,90W,120W,150W;120W,180W,240W,300W



The Selectable LED Area Lighting Series can be widely used in Outdoor Settings Excellent for Parking Lots, Pedestrian Walkways, Roadways, Tennis Courts, Basketball Courts, Stadiums, Arenas, Schools, Residential Areas and many other applications.

Lighting controls meet design lights consortium (DLC) networked lighting control system technical requirements, LLLC, Energy Monitoring and High End Trim function.

Features:

- Optical design, greatly improved the light utilization and evenness
- High efficiency LED Driver, voltage AC120-277V/277-480V
- Cast Aluminum design, better cooling, light quality, LED Tj <85°C
- Photocell Control & Motion Sensor (Optional)
- 0-10V dimming (10%-100%) standard
- CCT:3000-5000K
- 5 years manufacturer warranty
- Compatible with most Lutron and Leviton dimmers

Packaging information:

❖**WSD-AL691215W27-345K-D**
WSD-AL691215W48-345K-D
530MMX370MMX120MM(1Pcs/CTN)
(20.87" X14.57" X4.72")

❖**WSD-AL12182430W27-345K-D**
WSD-AL12182430W48-345K-D
660MMX370MMX120MM(1Pcs/CTN)
(25.98" X14.57" X4.72")

SPECIFICATION				
TYPE	WSD-AL691215W27-345K	WSD-AL691215W48-345K	WSD-AL12182430W27-345K	WSD-AL12182430W48-345K
WATTAGE	60W/90W/120W/150W	60W/90W/120W/150W	120W/180W/240W/300W	120W/180W/240W/300W
LUMEN	24239 lm(150W&4000K)	24129 lm(150W&4000K)	49432 lm(300W&4000K)	49231 lm(300W&4000K)
EFFICACY	> 150 lm/W			
CCT	3000K,4000K,5000K			
CRI	> 70			
INPUT VOLTAGE	AC120-277V/277-480V			
LIGHTING ANGLE	120°			
FACTORY SETTINGS	150W & 4000K		300W & 4000K	
LED TYPE	SMD2835			
PF	> 0.98			
DRIVER EFFICIENCY	> 90%			
PROTECTION LEVEL	Wet location			
LIFE TIME	> 75000 hours			
OPERATING TEMPERATURE	-22°F ~ 113°F			
WARRANTY	5 year limited			

Selectable LED Area Light

WSD LED INC
Green Lighting Resources

Wattages: 60W,90W,120W,150W;120W,180W,240W,300W

DIMENSION:

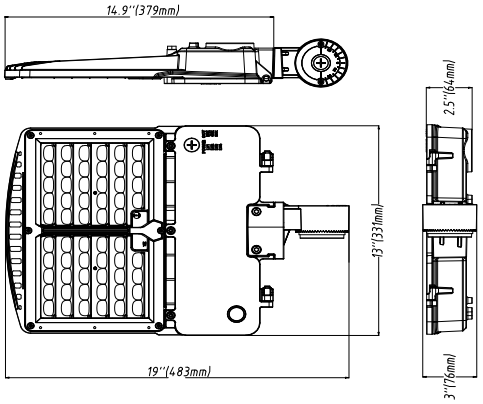

60-150W

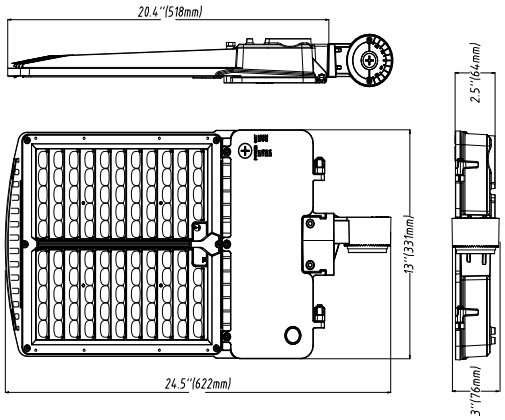

120-300W

SPECIFICATIONS:

Shell materials: Aluminum & PC.
Net weight : 7.8 lbs (150W)
11.0 lbs (300W)
Finish: Dark Bronze(Standard)
Product Size:
150W:483X331X64mm
19"X13"X2.5"
300W:622X331X64mm
24.5"X13"X2.5"

MOUNTING OPTIONS:(SOLD SEPARATELY)



WSD-NEWSBARM2-D

Arm Mount Square and Round poles) Standard versatile mounting arm is simple to install and can be used with existing poles for fit installations.



WSD-NEWSBSF2-D

Slipfitter Mount An optional cast aluminum mast arm adapter secures fixture head to nominal 2"(2-3/8"O.D. pipe size) horizontal steel tenon arm.



WSD-AL-T-D

Wall Mount Trunnion is easy to install for direct wall mounting with 1/2' conduit wiring mounting.



WSD-AL-150W-HOOD-D
WSD-AL-300W-HOOD-D

Shielding for 60-150W CCT 3000-5000K Area Lights and Shielding for 120-300W CCT 3000-5000K Area Lights.

PHOTOMETRICS:

Type 2:
Type 2 optics produce a symmetrical pattern that evenly shines light on both sides of the lamp. In a back-to-back configuration, it creates a rectangular

Type 3:
Type 3 optics produce an asymmetrical pattern that directs the majority of the light forward and equally on both sides of the luminaire. In a back-to-back configuration, it creates a rectangular pattern

Type 4:
Type 4 is suitable for applications where light is primarily required forward with minimal backlight. Typical installations include perimeter poles.

Type 5:
Type 5 optics produce a symmetrical square distribution pattern that distributes light equally on all sides of the luminaire. Type 5 luminaires is universal for most area lighting applications

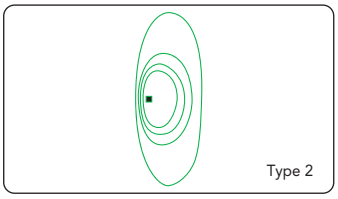

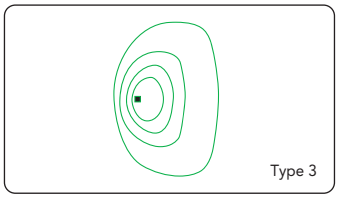

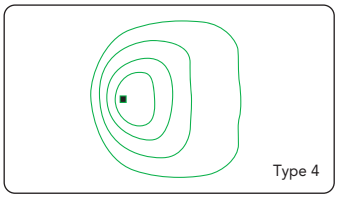

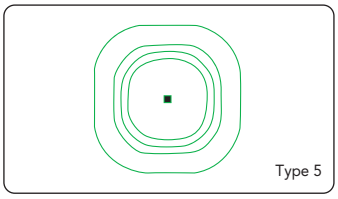

Selectable LED Area Light

WSD LED INC
Green Lighting Resources

Wattages: 60W,90W,120W,150W;120W,180W,240W,300W

CONTROL MODULE:

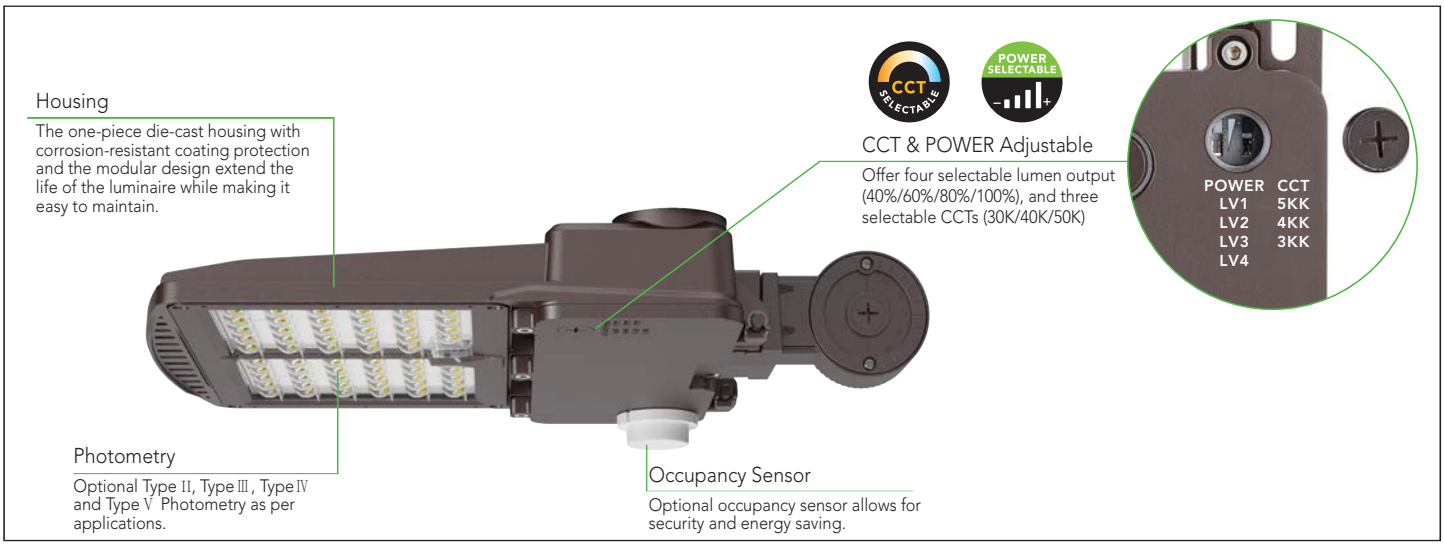

EPA OF AREA LIGHT

Item	1	2 @90°	2 @120°	2@180°	3 @90°	3 @120°	4 @90°
60W/90W/120W/150W	0.3632	0.6849	0.8861	0.7264	1.0481	1.2078	1.0481
120W/180W/240W/300W	0.4758	0.8091	1.059	0.9516	1.2849	1.3923	1.2849

PERFORMANCE

SPECIFICATION												
TYPE	WSD-AL691215W27-345K/WSD-AL691215W48-345K											
POWER	60W (TYPEIII)			90W (TYPEIII)			120W (TYPEIII)			150W (TYPEIII)		
CCT	3000K	4000K	5000K	3000K	4000K	5000K	3000K	4000K	5000K	3000K	4000K	5000K
LUMENS	10418	10631	10817	15243	15980	15826	18858	20044	19527	22392	24239	23185
EFFICACY	> 160	> 170	> 170	> 160	> 170	> 160	> 150	> 170	> 160	> 140	> 160	> 150

SPECIFICATION												
TYPE	WSD-AL12182430W27-345K/WSD-AL12182430W48-345K											
POWER	120W (TYPEIII)			180W (TYPEIII)			240W (TYPEIII)			300W (TYPEIII)		
CCT	3000K	4000K	5000K	3000K	4000K	5000K	3000K	4000K	5000K	3000K	4000K	5000K
LUMENS	21387	22342	22605	30764	33102	32562	37757	41179	39783	44379	49432	46876
EFFICACY	> 170	> 180	> 180	> 160	> 180	> 170	> 150	> 170	> 160	> 140	> 170	> 150

Selectable LED Area Light

WSD LED INC
Green Lighting Resources

Wattages: 60W,90W,120W,150W;120W,180W,240W,300W

PHOTOCELL & MOTION SENSORS (SOLD SEPARATELY)

	**Photocell** **No. OJ-M715-B** Finish: Blue USE: Used for outdoor LED lamps, working with light sensing principle , the OJ-M715-B sensor (OJ-M715-B for 120-277V) is used for Light sensor.		**Motion Sensor Remote Controller** **RC100** Remote Controller (Can only be used for NLC-MW-PT-002)
	**NLC-PC-001** Photocell		Bluetooth **NLC-BT-MW-GE-001** Bluetooth Microwave Fixture Sensor (GEBC Bluetooth)
	**NLC-MW-PT-002** Bi -level microwave Sensor		Bluetooth **NLC-BT-MW-SR-001** Bluetooth Microwave Fixture Sensor (Silvair Bluetooth)

ORDERING INFORMATION:

EXAMPLE: WSD-AL691215W27-345K-Z[D,W,B,S]-TN-U[S,A,T]-Y[Blank,P]-E[Blank,M]

WSD	AL	691215	27	345K	Z	TN	U	Y	E
COMPANY	PRODUCT	POWER	VOLTAGE	CCT	FINISH	LIGHT ANGLE	MOUNLIGHT	CONTROL	CONTROL
WSD - (WSD LED INC)	**AL** L ED Area Light	**691215** (60W/90W/ 120W/150W) **12182430** (120W/180W/ 240W/300W)	**27** AC120-277V **48** AC277-480V	**345** 4000K/4000K /5000K	**D** (Dark Bronze) **W** (White) **B** (Black) **S** (Silvery)	**T2**(Type II) **T3** (Type III) **T4** (Type IV) **T5** (Type V)	**S** (Slip fitter) **T** (Trunnion) **A** (Arm)	**P** Photocell	**M** Motion Sensor

Selectable LED Area Light

WSD LED INC
Green Lighting Resources

Wattages: 60W,90W,120W,150W;120W,180W,240W,300W

PHOTOMETRICS:

For complete IES files, please visit our website.

WSD-AL691215W27-345K-D (150W,4000K,TypeIII)

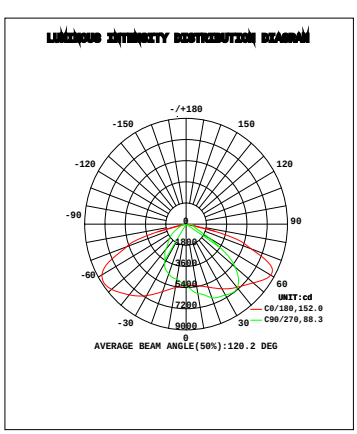

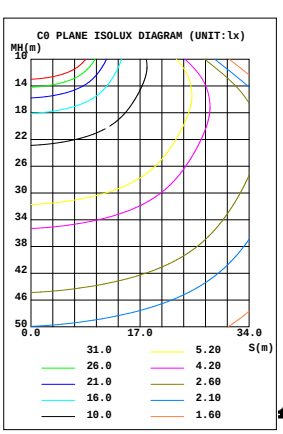

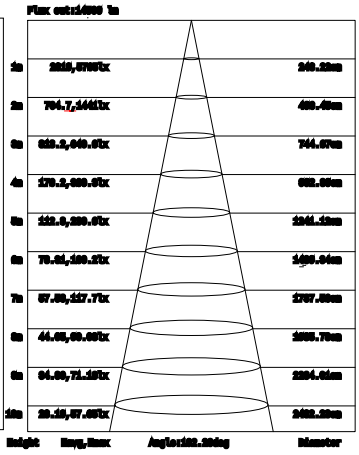

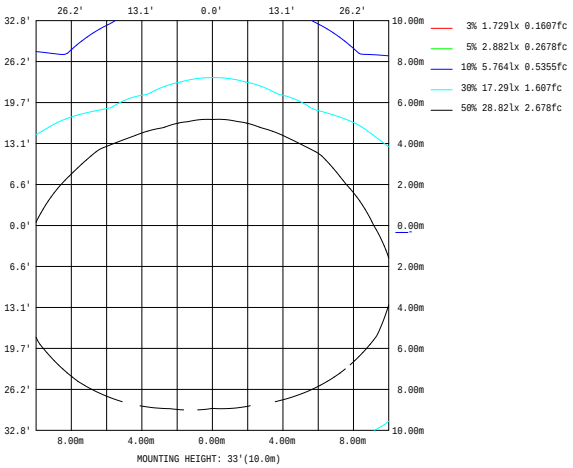

WSD-AL12182430W27-345K-D (300W,4000K,TypeIII)

