Selectable LED Area Light

MOUNTING GUIDES

S: SLIP FITTER MOUNTING

Dimensions of the slip fitter

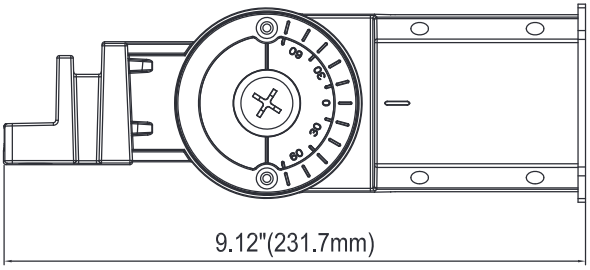

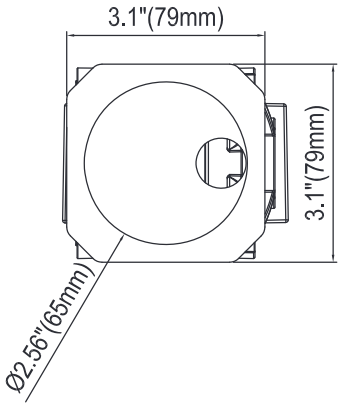

Step 1

Connect the AC wire, and then insert the arm of the slip fitter to the pole.

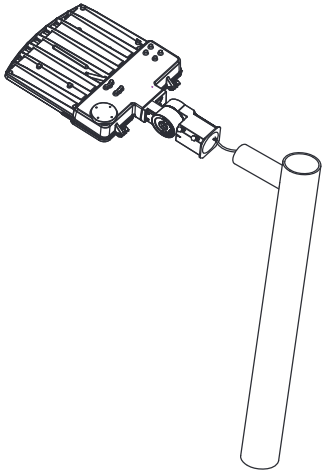

Step 2

Tighten the screws on the side of the arm and then power on.

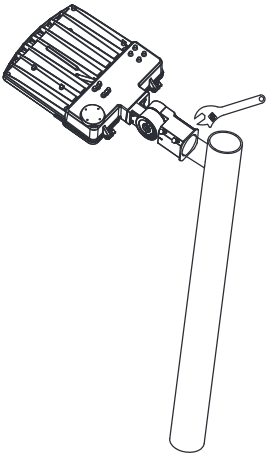

Selectable LED Area Light

MOUNTING GUIDES

Slip fitter assembly drawing

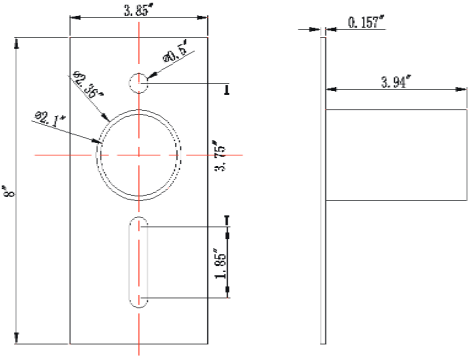

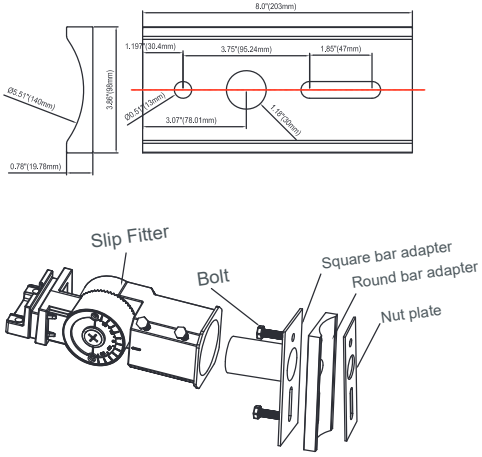

Step 1

Drill holes on the square pole corresponding to the holes on the square bar adapter, and use the bolt and nut plate to fix the fixture to the Adapter tightly.

Step 2

Connect the AC wire of the fxture and tiahten the water-proof gasket and cover plate on the sauare bar adapter oy screws, then power on.

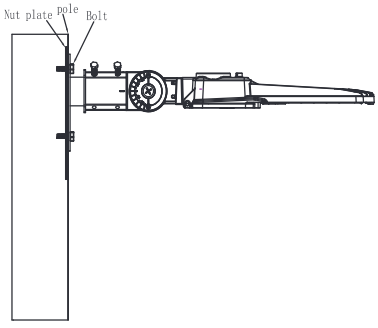

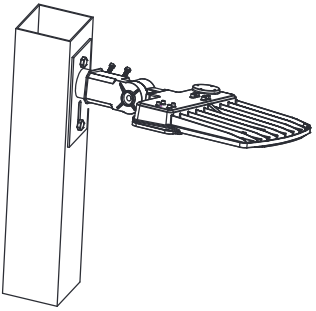

Selectable LED Area Light

MOUNTING GUIDES

A2: SLIP FITTER MOUNTING FOR ROUND POLE

Step 1

Drill holes on the round pole corresponding to the holes on the Round bar adapter, and use the bolt and nut plate to fix the fixture to the Adapter tightly.

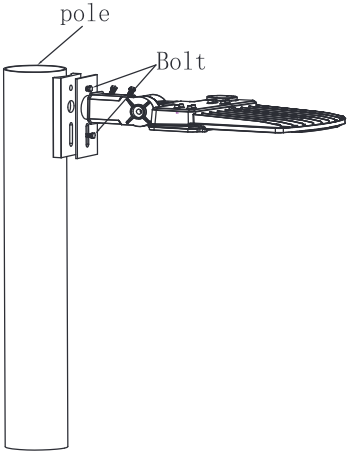

Step 2

Connect the AC wire of the fixture and tighten the water-proof qasket and cover plate on the square bar adapter by screws,then power on.

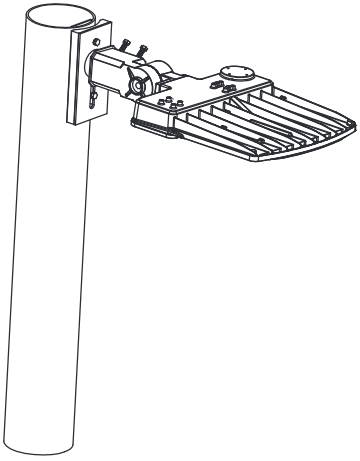

Selectable LED Area Light

MOUNTING GUIDES

T: TRUNNION MOUNTING

Dimensions of the trunnion

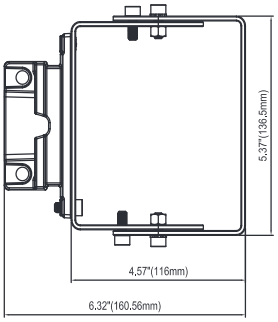

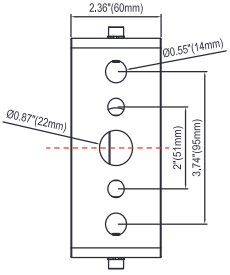

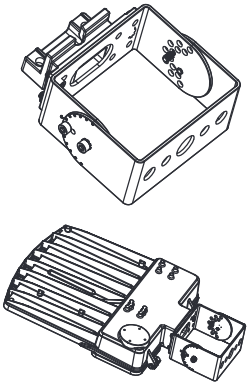

Step 1

Drill two holes on the wall corresponding to the holes on the trunnion, and knock expansion screws into the holes.

Step 2

Use the nuts to fix the fixture to the wall aiming at the expansion screws, and adjust angle of the bracket and tighten the small screw on the side, then connect the AC wire.

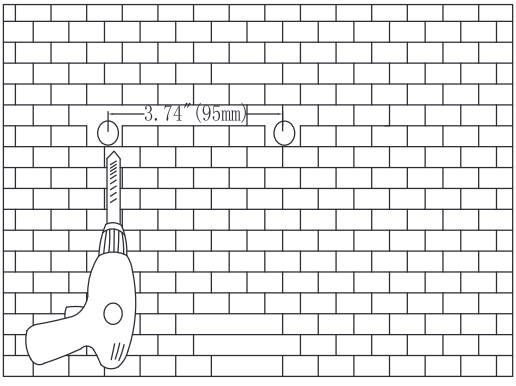

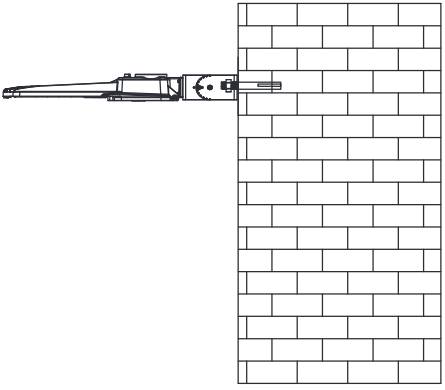

Selectable LED Area Light

MOUNTING GUIDES

A1: ARM MOUNTING FOR SQUARE POLE

Arm dimensions

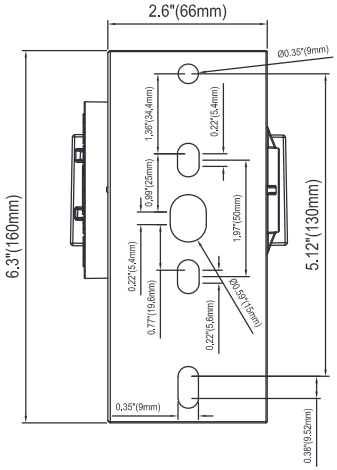

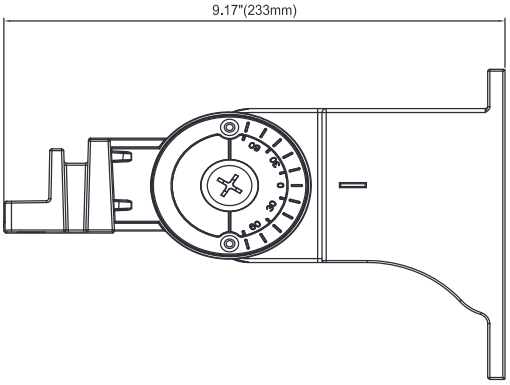

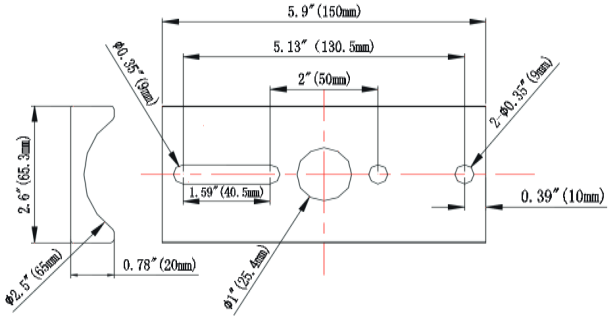

Selectable LED Area Light

MOUNTING GUIDES

Arm assembly drawing

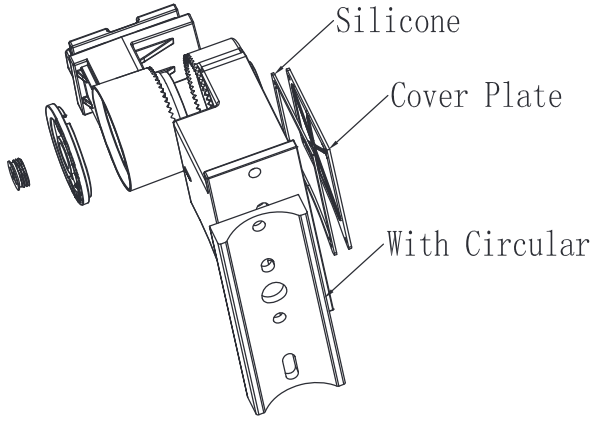

Formula arm pipe installation

Step 1

Drill holes on the square pole corresponding to the holes on the arm, and use the bolt and nut plate to fix the fixture to the pole tightly

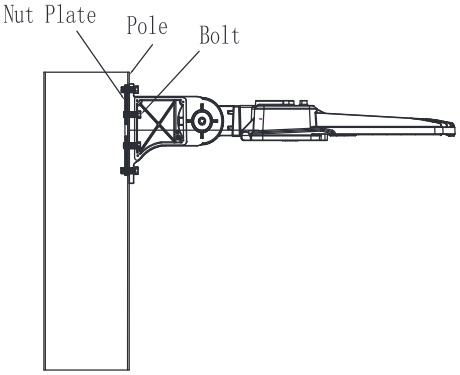

Step 2

Connect the AC wire of the fixture and tighten the water-proof gasket and cover plate on the arm by screws, then power on.

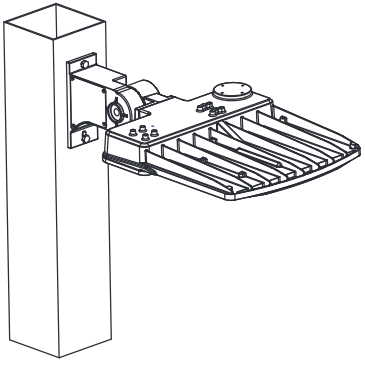

Selectable LED Area Light

MOUNTING GUIDES

A2: ARM MOUNTING FOR ROUND POLE

Step 1

Drill holes on the round pole corresponding to the holes on the arm, and use the bolt and nut plate to fix the fixture to the pole tightly

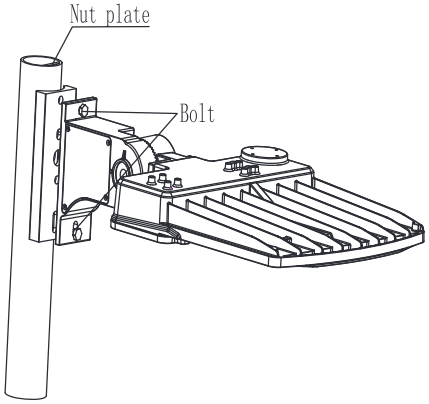

Step 2

Connect the AC wire of the fixture and tighten the water-proof gasket and cover plate on the arm by screws, then power on.

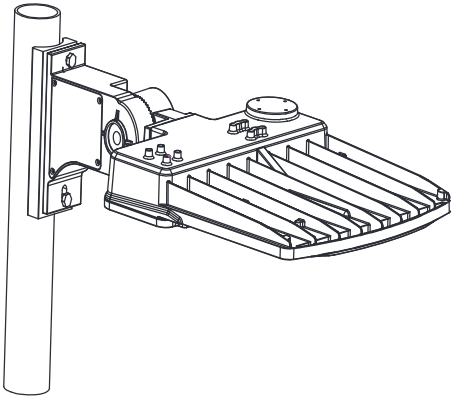

Selectable LED Area Light

MOUNTING GUIDES

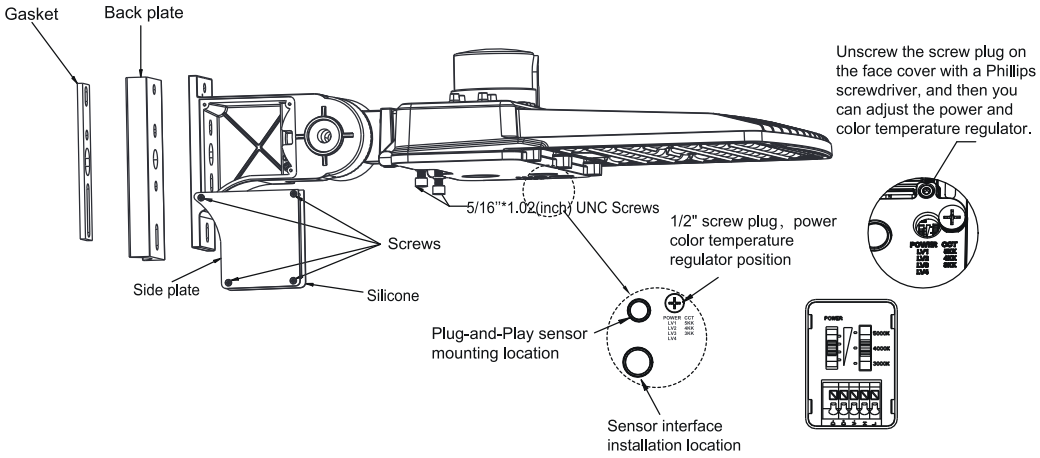

V Powor and CCT selectable version

1.Remove the 1/2” screw plug on the bottom of the fixture.

2.select power(white)and CCT(black)by sciding the respective switch to the desired according to the figure.

3.Replace the 1/2” screw pluy and tighten with a flat head screwdriver.

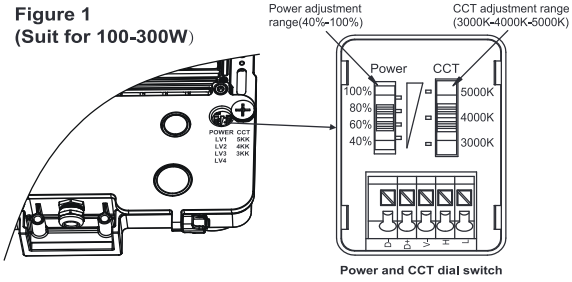

Selectable LED Area Light

MOUNTING GUIDES

WIRING DIAGRAM

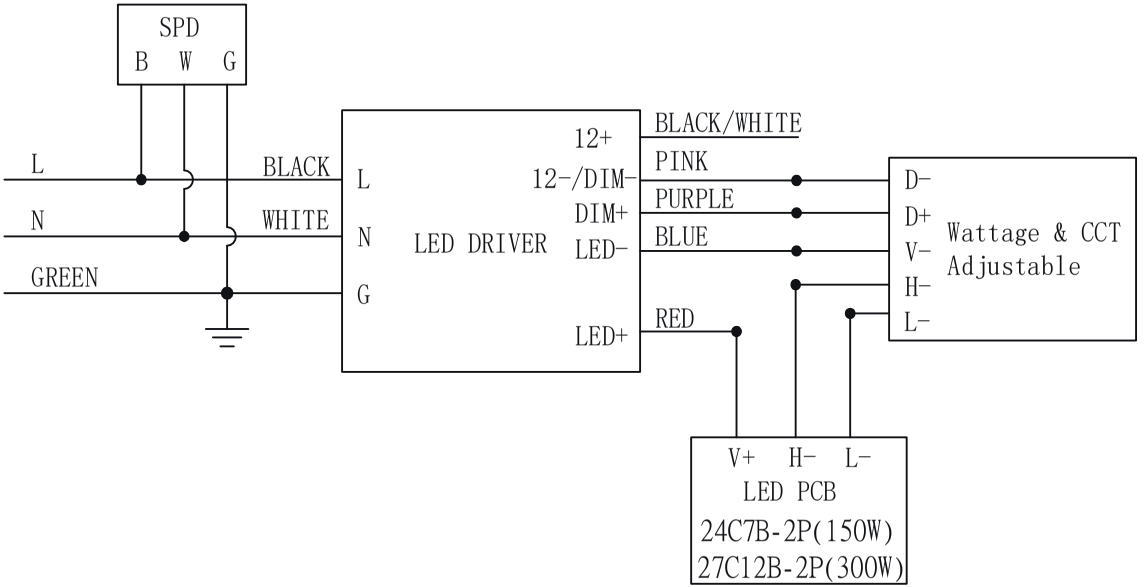

Selectable LED Area Light

MOUNTING GUIDES

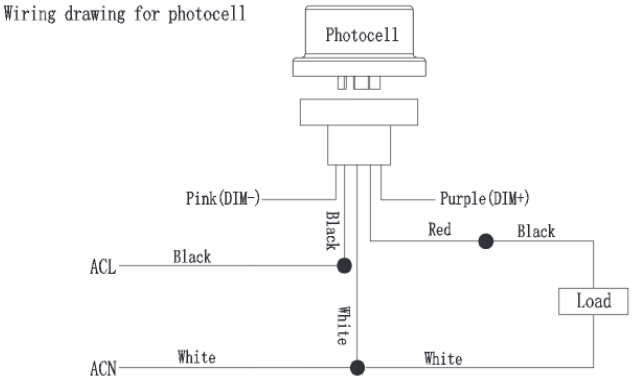

VI QUALITY ASSURANCE

- Quality assurance is based on proper storage, transportation, installation, using and maintenance
- Damages caused by man-made mistake or improper use are not covered by the warranty
- Risk of electrical shock!
- During the warranty period, the manufacturer will provide appropriate support and repair service according to the actual situation

WARNINGS AND CAUTIONS

- The product must be installed according to the instructions. Installed by a person familiar with the product, production and product hazards.
- Avoid fire and electric shock. When install the lighting fixtures, you need to understand the electrical characteristics. If you are not sure, do not attempt to install. Please contact the electrician.
- Understand the structural features and dimensions of lighting before installation
- Do not drill holes or change internal lines when install