POST TOP LIGHT INSTALLATION INSTRUCTIONS

IMPORTANT

READ CAREFULLY BEFORE INSTALLING FIXTURE. RETAIN THESE INSTRUCTIONS FOR FUTURE REFERENCE.

Fixtures must be wired in accordance with the National Electrical Code and all applicable local codes. Proper grounding is required for safety. THIS PRODUCT MUST BE INSTALLED IN ACCORDANCE WITH THE APPLICABLE INSTALLATION CODE BY A PERSON.

FAMILIAR WITH THE CONSTRUCTION AND OPERATION OF THE PRODUCT AND THE HAZARDS INVOLVED.

WARNING: Make certain power is OFF before installing or maintaining fixture. No user serviceable parts inside.

POLE MOUNT

1. Assemble the luminaire housing, the three arms, the three gaskets and the pole adaptor using the provided hardware (Fig.1).

NOTE: Pull the power cable through the arm, the appropriate gasket and the pole adaptor luminaire holes.

2. Place the luminaire close to the pole and make the appropriate wiring connections using wire nuts (White to Neutral lead, Black to Line lead, Green to Ground lead) (Fig. 2).

NOTE: Push all wires inside the pole.

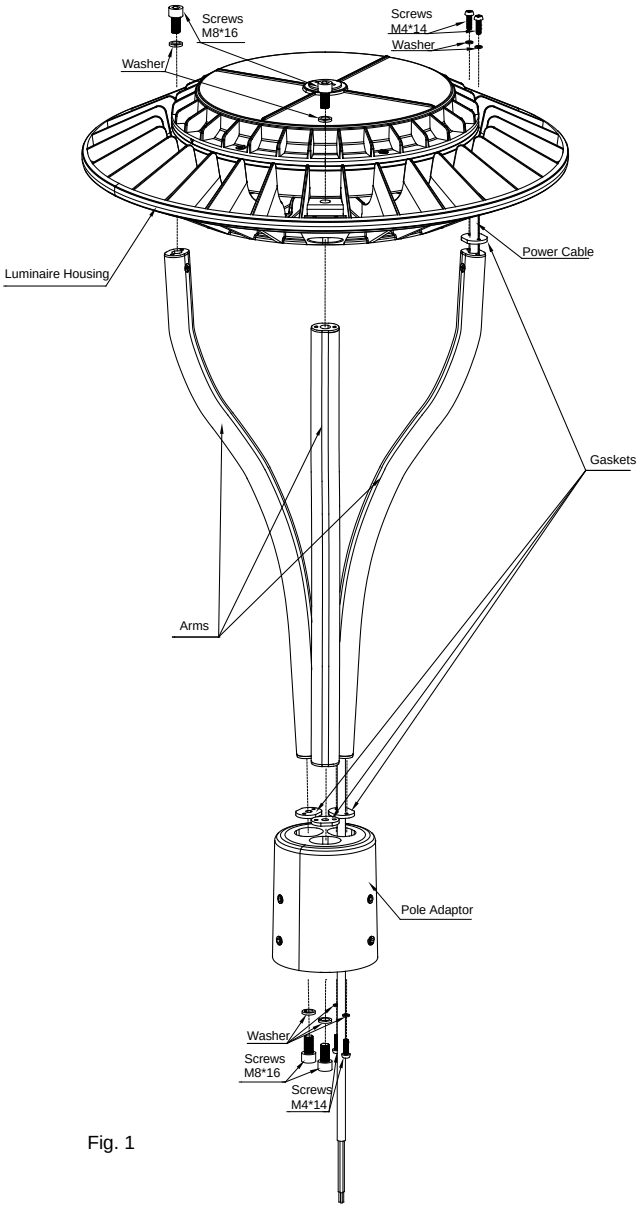

Fig. 1

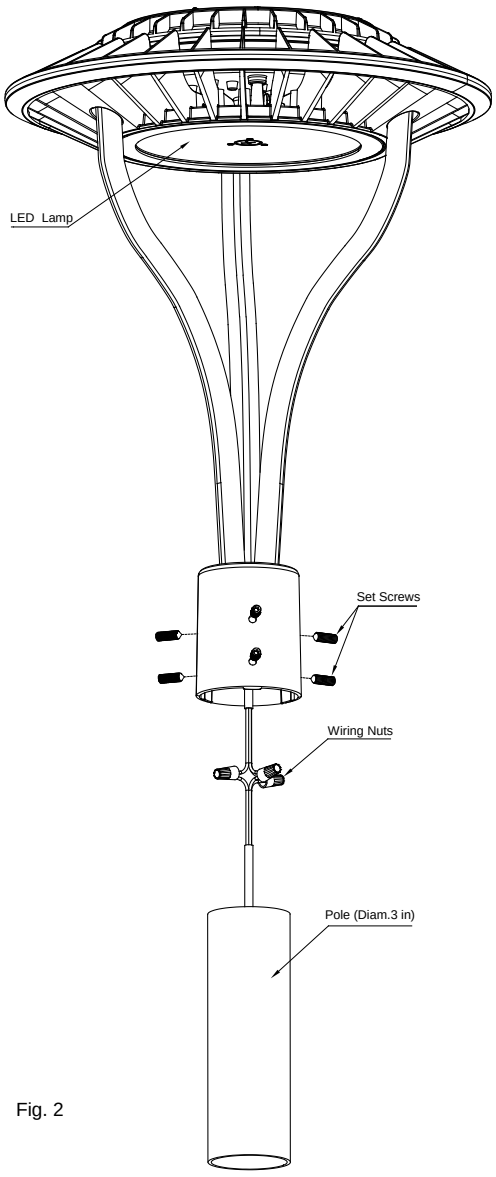

Fig. 2

POST TOP LIGHT INSTALLATION INSTRUCTIONS

3. Mount the luminaire on the pole using the six Alloy Steel Cone-Point Set Screws (Fig. 2).
NOTE: Before mounting, place the luminaire on the pole in the required position (see luminaire instruction label). Not suitable for mounting within 1.2m (4ft) of the ground.
4. Turn on the luminaire.

WIRING

WARNING: Before Wring, Make certain the input voltage is correct!

1. Connect the black fixture lead to the LINE supply lead.
2. Connect the white fixture lead to the NEUTRAL supply lead.
3. Connect the green wire from fixture to supply GROUND.

0-10V DIMMABLE WIRING

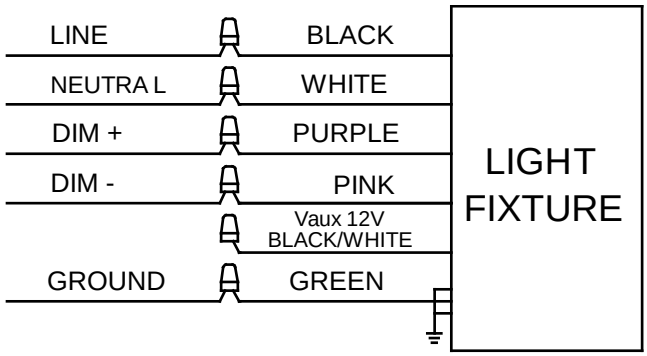

4. Connect the purple fixture lead to the DIM+ lead.
5. Connect the pink fixture lead to the DIM- lead.
6. Cap the Vaux 12V fixture lead, if present. Do NOT connect.

TROUBLESHOOTING

1. Check that the line voltage at fixture is correct. Refer to wiring directions.
2. Is the fixture grounded properly?

CLEANING&MAINTENANCE

CAUTION: Be sure fixture temperature is cool enough to Touch. Do not clean or maintain while fixture is Energized.

1. Clean lens & fixture with non-abrasive glass cleaning solution.
2. Do not open fixture to clean the LED. Do not touch the LED

Note: These instructions do not cover all details or variations in equipment nor do they provide for every possible situation during installation operation or maintenance.

POST TOP LIGHT INSTALLATION INSTRUCTIONS

Power and CCT selectable version

1. Remove the G3 /4 screw plug on the top of the fixture.
2. Select Power (White) and CCT(Black) by sliding the respective switch to the desired value according to the figure.
3. Replace the G3/4 screw plug and tighten with a flat head screwdriver.

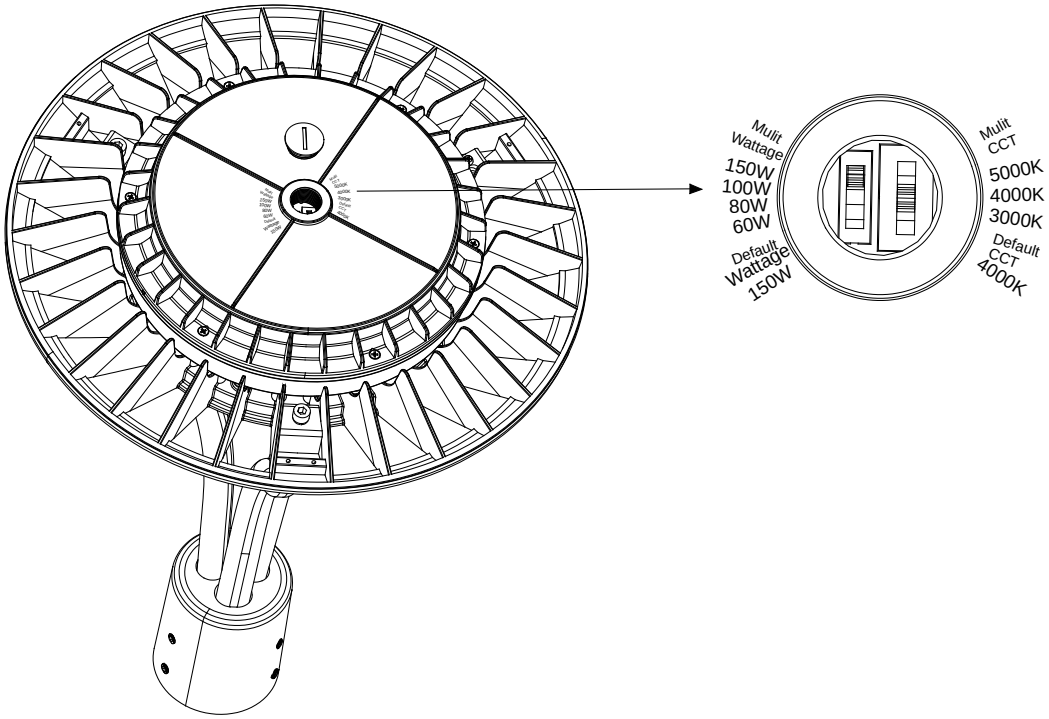

Sensor installation instructions

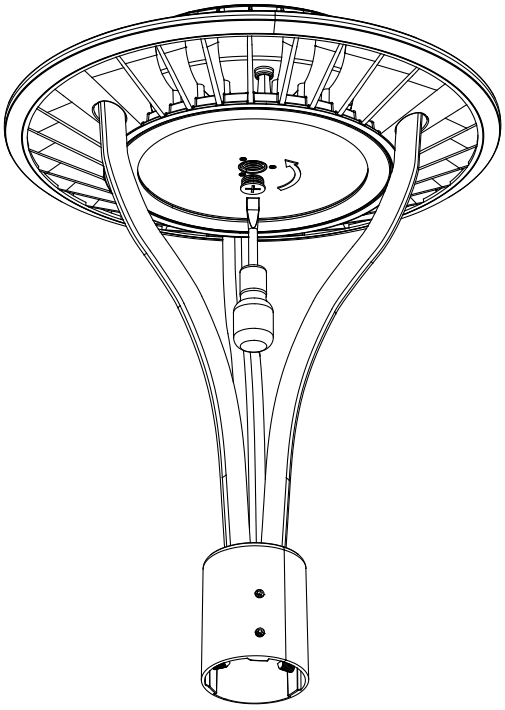

1、As shown in picture, turn counterclockwise to unscrew the G1 /2 screw plug

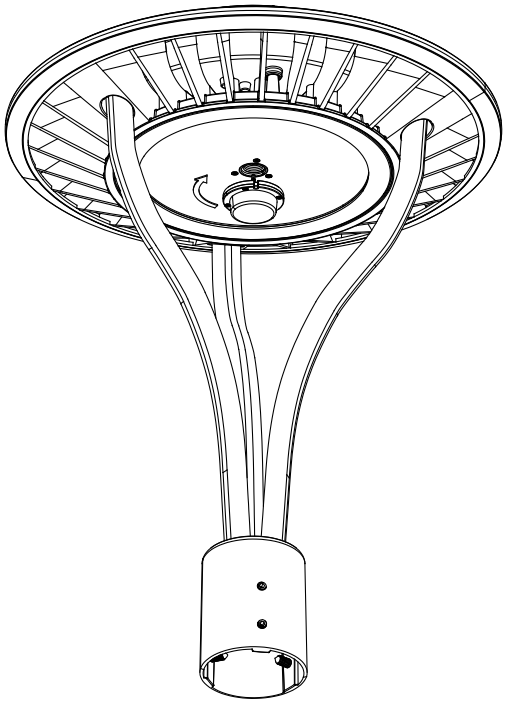

2、Insert the sensor into the hole and tighten it clockwise.