Installation Instruction

⚠ WARNING

- To reduce the risk of death, personal injury or property damage from fire, electric shock, falling parts, cuts/abrasions, and other hazards read all warnings and instructions included with and on the fixture box and all fixture labels.
- Before installing, servicing, or performing routine maintenance upon this equipment, follow these general precautions.
- Commercial installation, service and maintenance of luminaires should be performed by a qualified licensed electrician.
- For the installation: If you are unsure about the installation or maintenance of the luminaires, consult a qualified licensed electrician and check your local electrical code.
- To prevent wiring damage or abrasion, do not expose wiring to edges of sheet metal or other sharp objects.
- Do not make or alter any open holes in an enclosure of wiring or electrical components during kit installation.

⚠ WARNING

- Turn off electrical power at fuse or circuit breaker box before wiring fixture to the power supply.
- Turn off the power when you perform any maintenance.
- Verify that supply voltage is correct by comparing it with the luminaire label information.
- All wiring connections should be capped with UL approved wire connectors.

⚠ CAUTION

- Avoid direct eye exposure to the light source while it is on.
- Account for small parts and destroy packing material, as these may be hazardous to children.
- Risk of burn. Disconnect power and allow fixture to cool before changing bulb or handing fixture.

NOTICE: Green ground screw provided in proper location.Do not relocate.
NOTICE: Minimum 90° supply conductors.
NOTICE: Specifications and dimensions subject to change without notice.
NOTICE: Suitable for Dry or Damp location

General Wiring Diagram

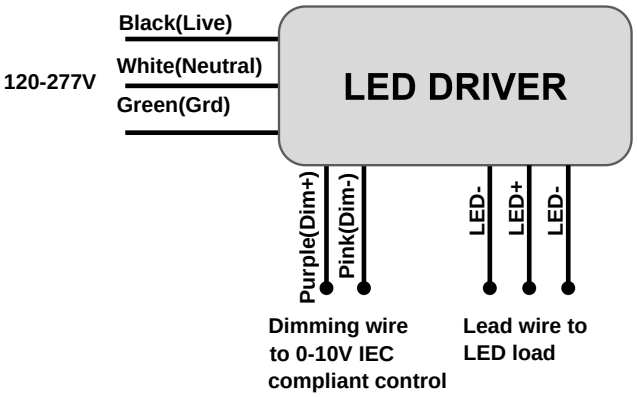

Installation Instruction

Pendant Mounting, Drywall Ceiling(off grid)

1.Preparation

Take out the fixture and accessories package from the box.

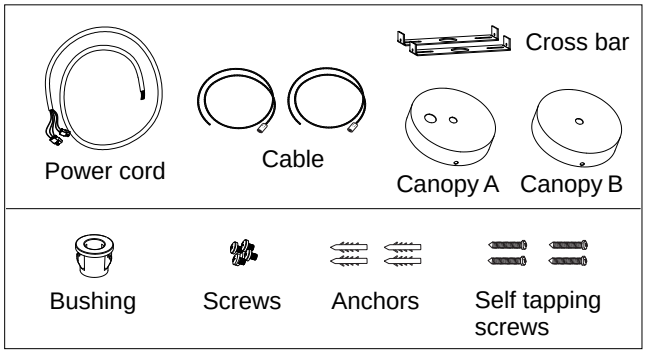

2.Fix cable to canopies.

Release locknut, pass the cable through the canopy A and tighten the nut to fix the cable. Repeat to fix cable to canopy B.

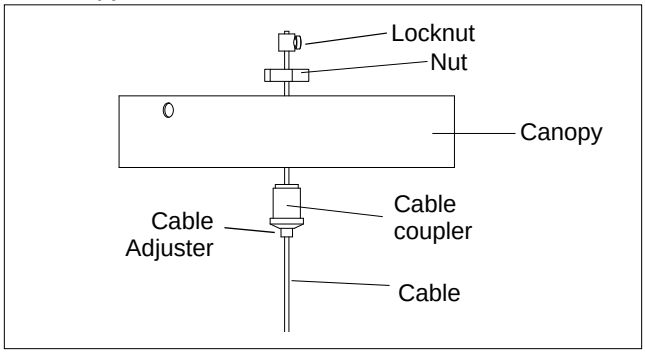

3. Attatch Power cord to the fixture.

Remove down-light lens with suction cup. Remove end-cover nearby the outlet hole(Fixture A End) by removing the 4 screws as shown.Connect power cord to the connector inside housing and fix it to outlet hole with Rubber cable sheath. Then reinstall the end cover.

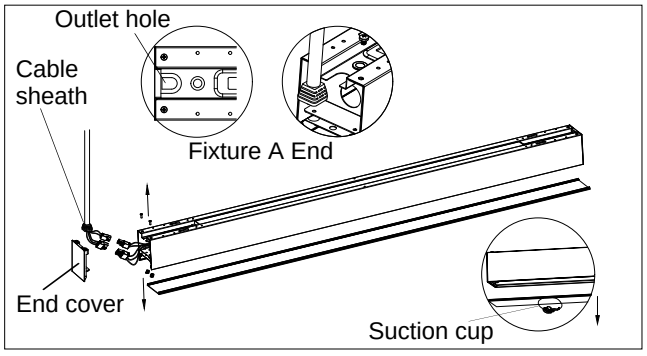

4.Install canopy B and hang the fixture right end.

Install the canopy B after positioning the mounting holes with positioning plate. Hang the right end of fixture with cable and adjust to desired height. Make sure that the fixture is securely hung.

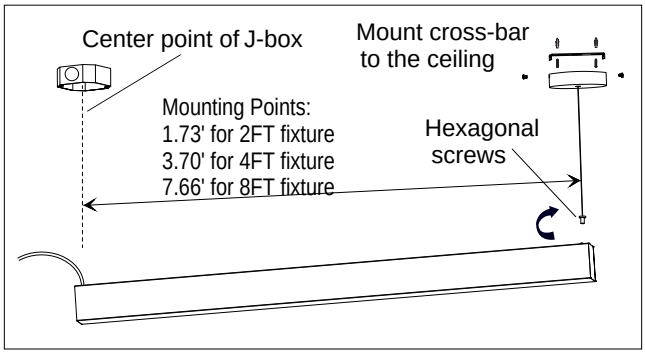

5. Install canopy A.

Pass power cord through the canopy A and connect it to main power wires. Mount the cross-bar onto J-box and fix canopy A to the cross bar to cover the J-box.

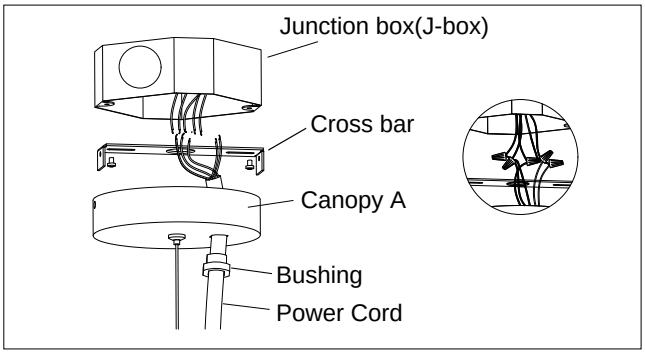

6.Hang the fixture left end.

Make sure that the fixture is securely hung. The installation is completed.

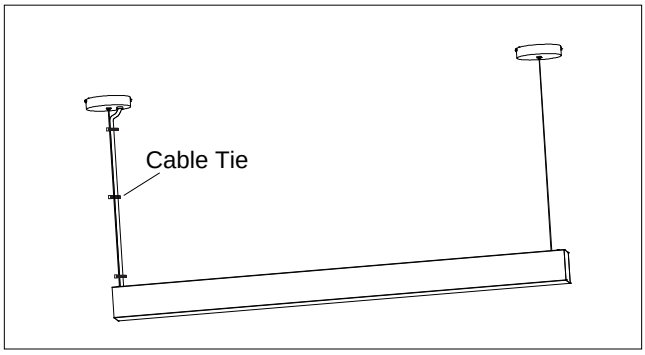

CAUTION

Please isolate two dimming wires(pink and purple) by P2 terminal individually if no need dimming; MUST connect wires with corresponding colors.

Installation Instruction

Row Connection

1.Use suction cup to remove the diffuser of Fixture II to be connected, then remove the plastic end-cover nearby the outlet hole(Fixture A End), and take out the wire connectors.

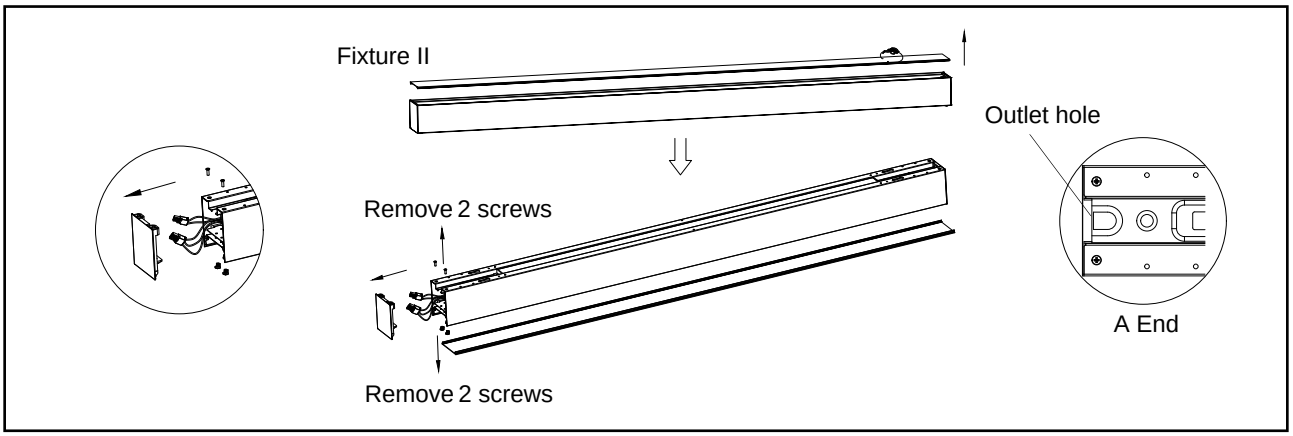

2.Install the cross-bar and canopy to the ceiling after positioning the mounting holes. Hang the B End of Fixture II with cable and adjust to the desired height. Make sure that the fixture is securely hung.

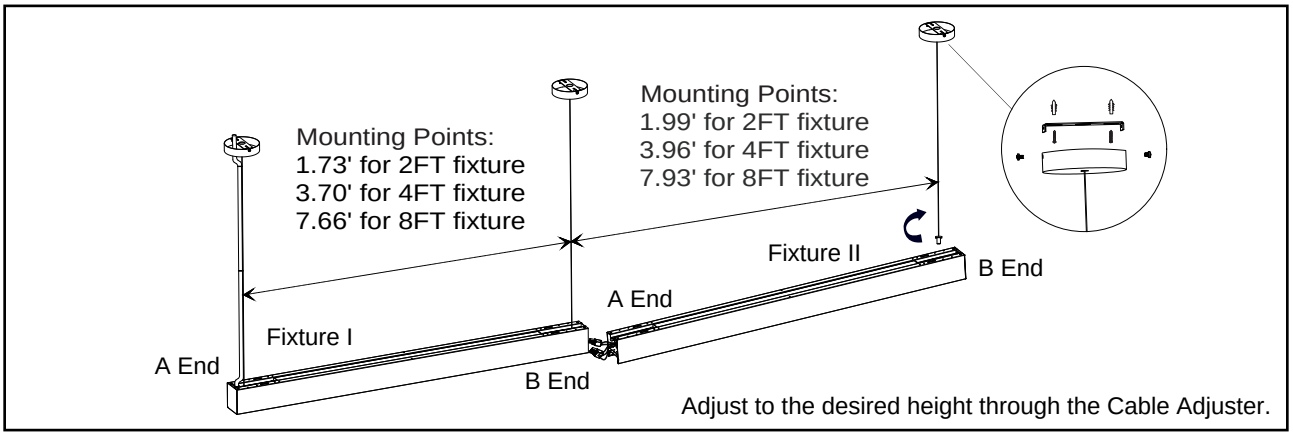

3.Splice the Fixture I and Fixture II and do wiring connection. The wires should pass through the "I" connector. Make sure the "I" connector being embedded into the 2 fixture bodies. Then fix the "I" connector with the previously removed screws.

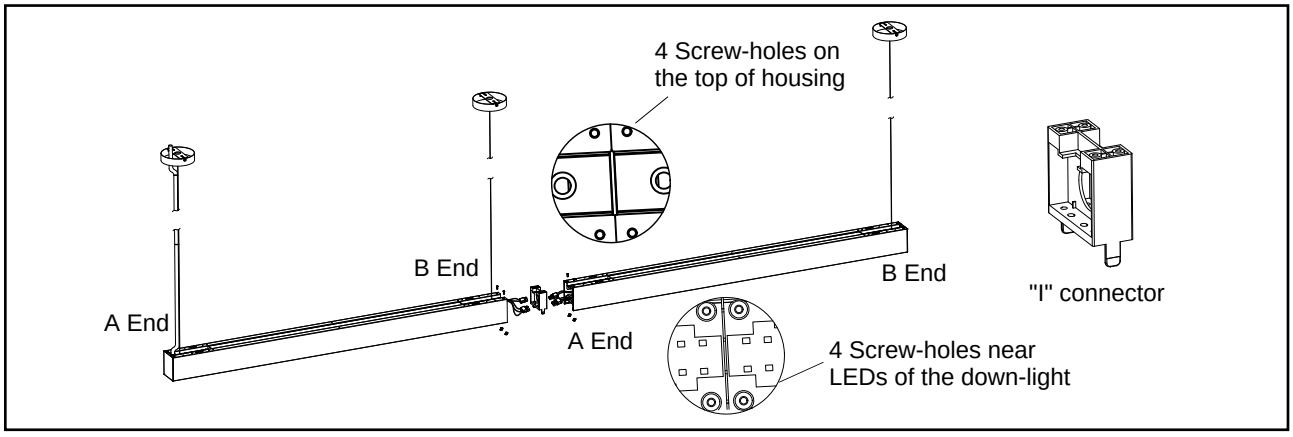

Installation Instruction

4.Cut the soft lens into a suitable length(refer to the Diffuser Length Table) , and install it to the channel of the fixture housing for seamless continue run.

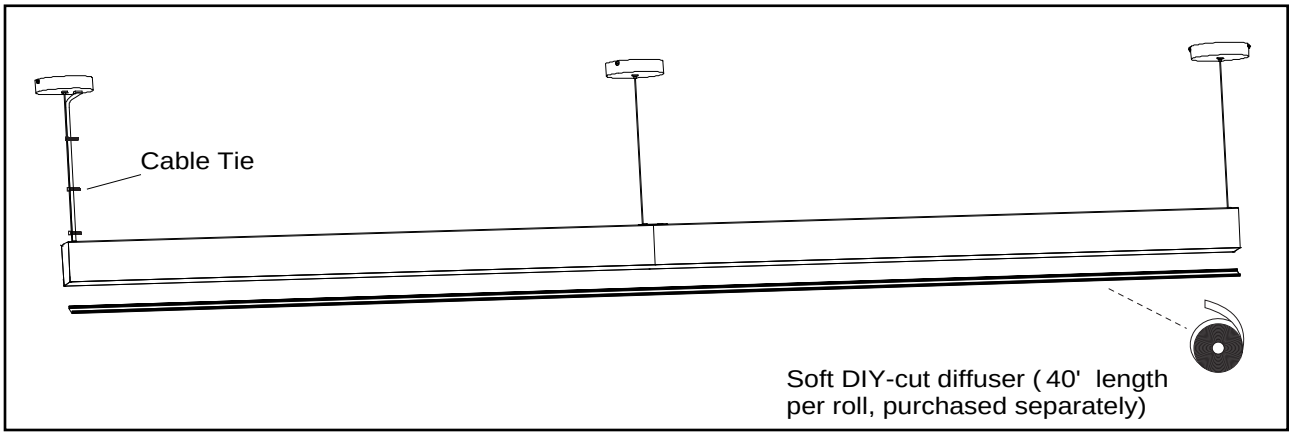

Diffuser Length Table(for seamless continuous run)

Fixture length	2 fixtures connection	3 fixtures connection	4 fixtures connection	5 fixtures connection	6 fixtures connection	7 fixtures connection	8 fixtures connection	9 fixtures connection	10 fixtures connection
2 FT	3' 11.8"	5' 11.73"	7' 11.67"	9' 11.61"	11' 11.54"	13' 11.48"	15' 11.42"	17' 11.35"	19' 11.29"
3 FT	7' 11.04"	11' 10.6"	15' 10.16"	19' 9.72"	23' 9.28"	27' 8.83"	31' 8.39"	35' 7.95"	39' 7.51"
4 FT	15' 10.16"	23' 9.28"	31' 8.39"	39' 7.51"	/	/	/	/	/

Optional connecting methods

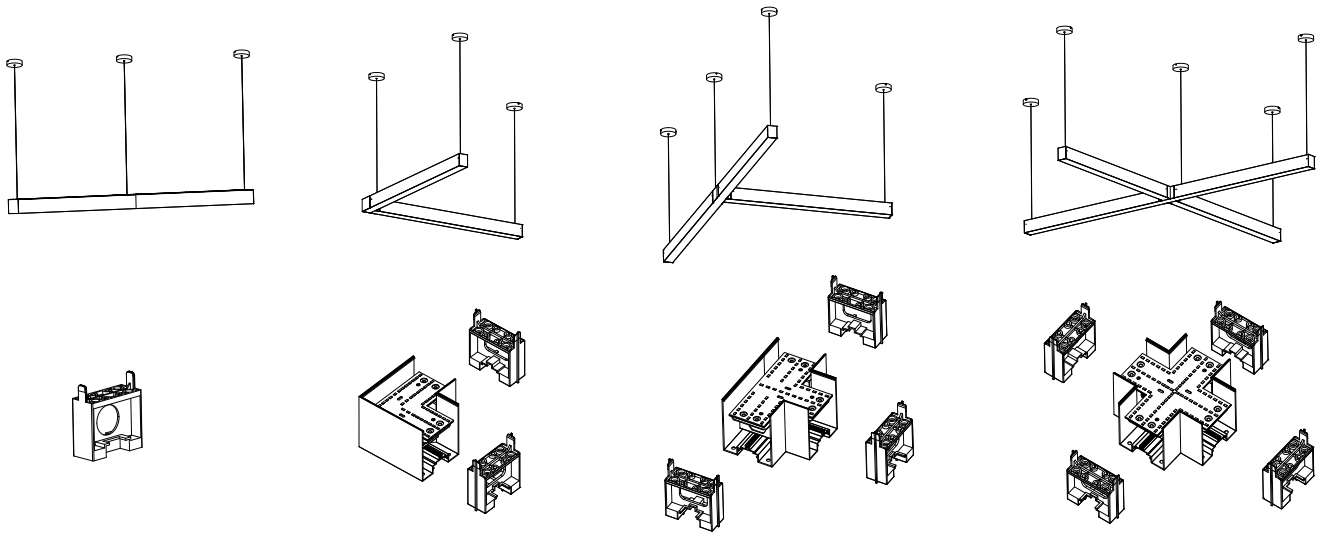

“I” connector “L” connector “T” connector “+” connector

Each Power Feed:

120VAC: connections up to 40ft (Not exceeding 13 watts per foot)

277VAC: connections up to 100ft (Not exceeding 13 watts per foot)

CAUTION Please isolate two dimming wires(pink and purple) by P2 terminal individually if no need dimming; MUST connect wires with corresponding colors.

Installation Instruction

Surface mounting in the ceiling

Before installation

1.Take out the fixture and accessories from packaging and inspect for any damages. Handle new LED fixture with care.

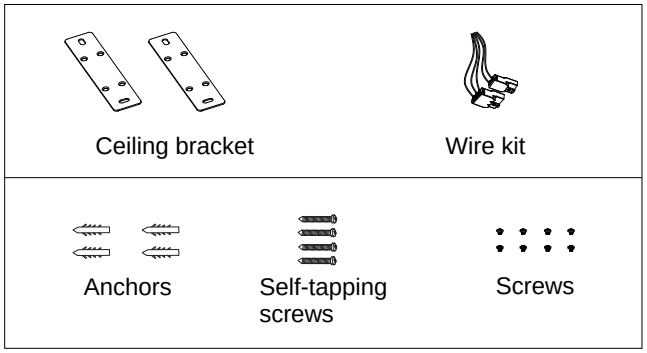

2.Remove the end-cover nearby the outlet hole and connect Wire kit to the fixture, then reattach the end-cover after passing the wires through the outlet hole.

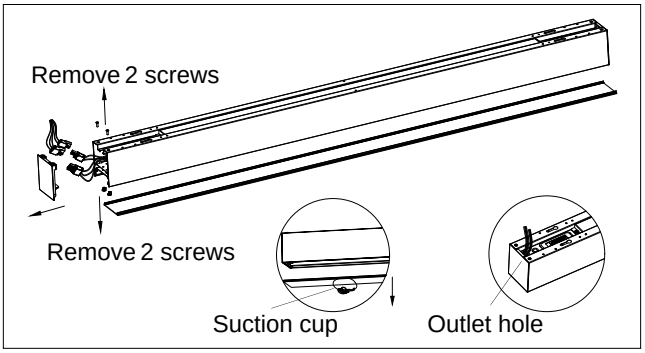

Method A: Surface mounting with brackets

1.After positioning, drill holes in the ceiling and install anchors.

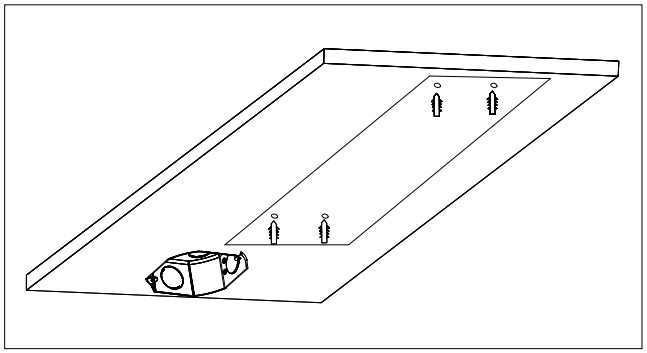

2.Fix the 2 brackets to the fixture back with provided screws.

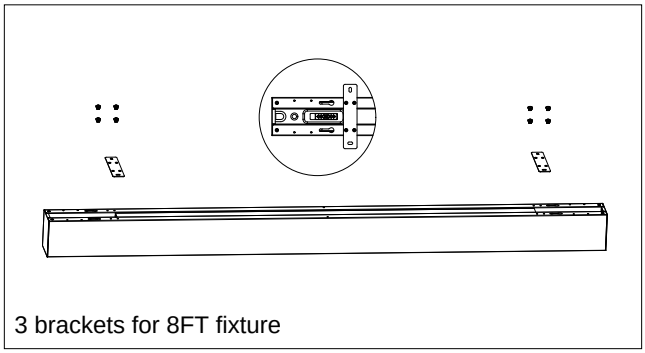

3.Do wiring connection to Main Power as required by code and local regulations.

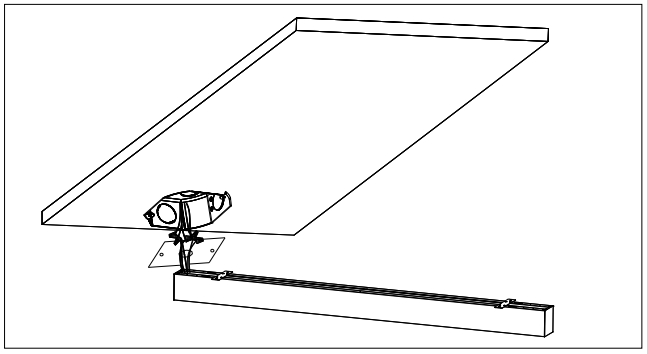

4.Finally, screw in 4 screws as shown to ensure the fixture hung in the ceiling firmly.

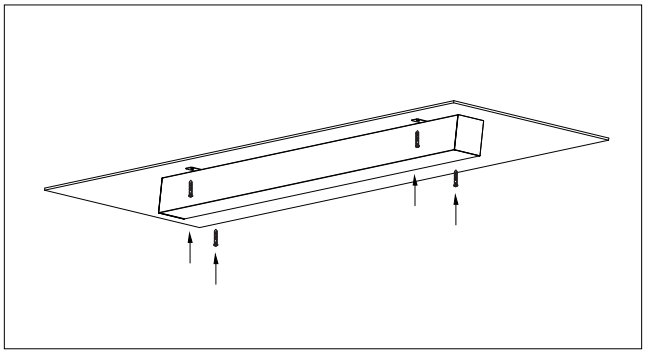

⚠ CAUTION

Please isolate two dimming wires(pink and purple) by P2 terminal individually if no need dimming; MUST connect wires with corresponding colors.

Installation Instruction

Method B: Surface mounting without brackets

1.After positioning, drill holes in the ceiling, insert 4 anchor bolts and screw in screws to a depth of 4/5.

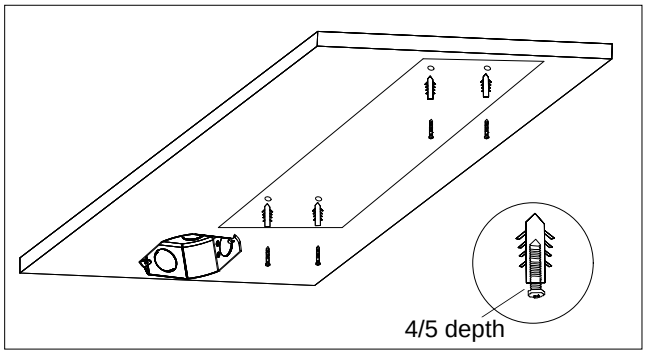

2.Do wiring connection to Main Power as required by code and local regulations. Hang fixture to the screw heads and slide fixture to right to make it hung firmly.

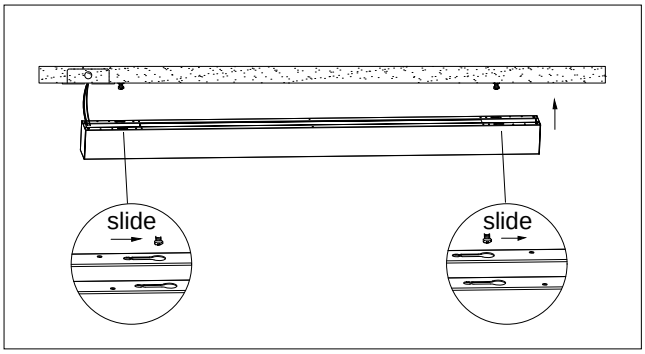

CAUTION Please isolate two dimming wires(pink and purple) by P2 terminal individually if no need dimming; MUST connect wires with corresponding colors.

Installation Instruction

Wall mouting

Before installation

1.Take out the fixture and accessories package from the box.

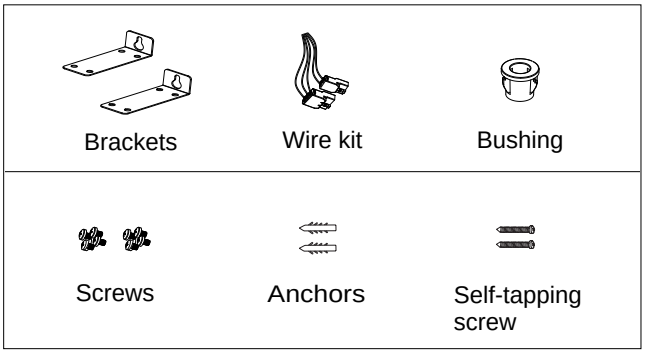

2.Remove the end-cap and connect the Wire kit to the fixture.Drill a 0.39" diameter hole on side of the fixture, fix the bushing to the hole and pass the wires through the hole.

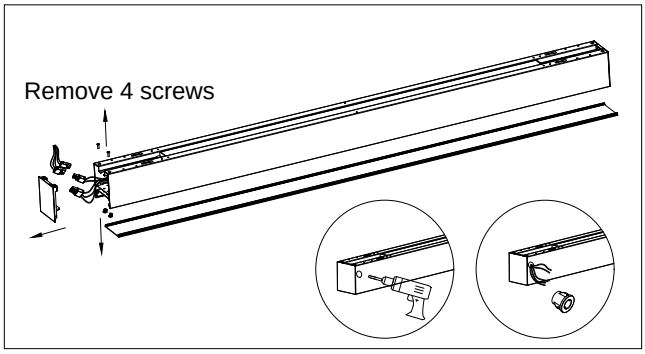

Installation steps

1.After positioning, drill holes in the wall, install 2 anchors.

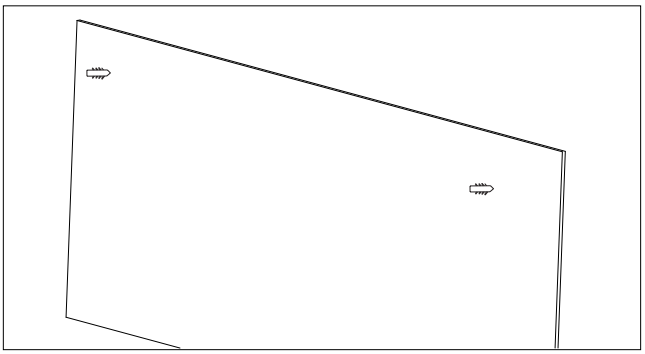

2.Fix the brackets to the upper surface of the housing with screws.

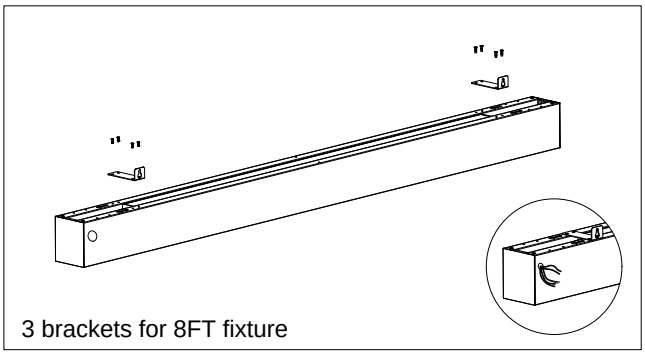

3.Do wiring connection to Main Power as required by code and local regulations. After connections push all wires and wire nuts inside junction box. Screw in 2 screws as shown to complete the wall installation.

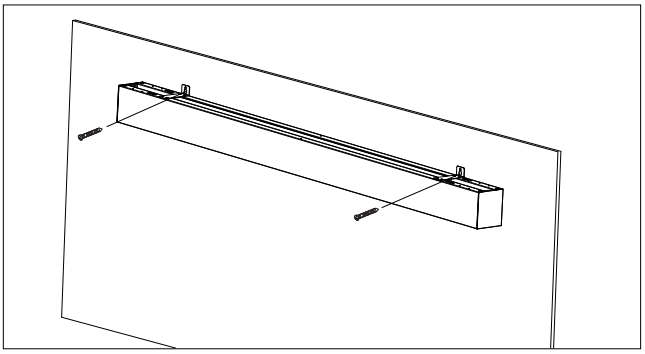

CAUTION

Please isolate two dimming wires(pink and purple) by P2 terminal individually if no need dimming;
MUST connect wires with corresponding colors.

Installation Instruction

Recessed mounting

1.Take out accessories from packaging.

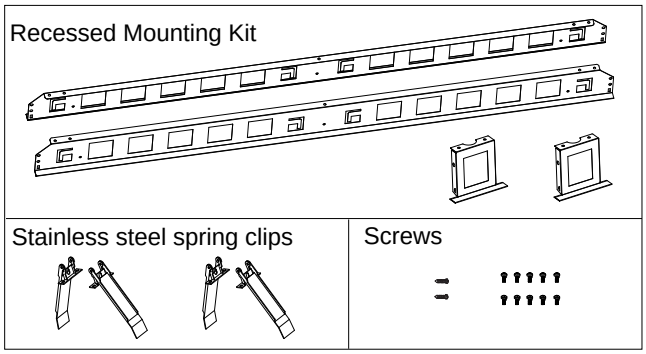

2.Attatch Power cord to the fixture.

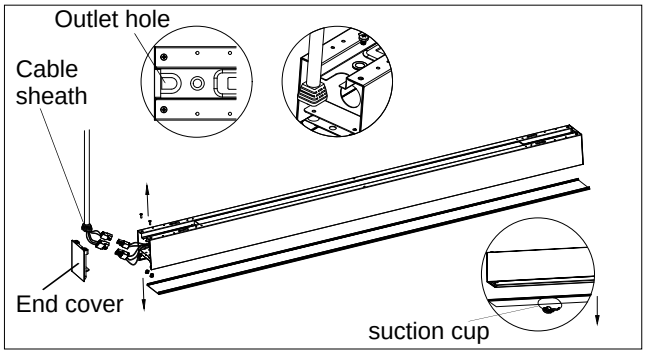

3.Install the Recessed Mounting Kit.

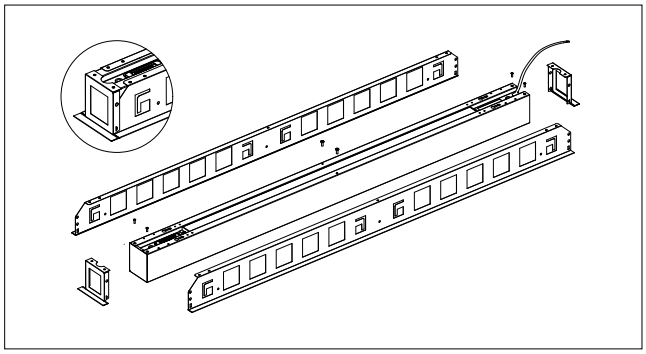

4.Tighten the side bracket with self-tapping screws.

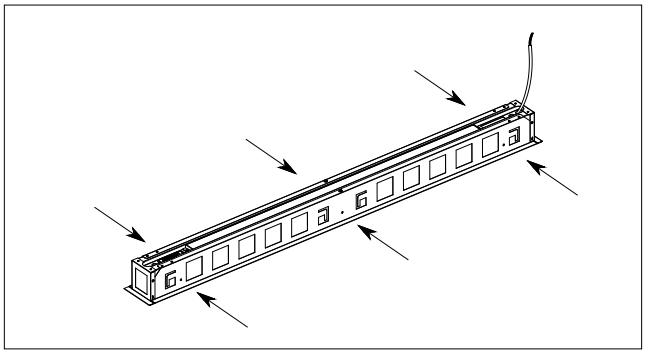

5.Secure the spring clips to the fixture back.

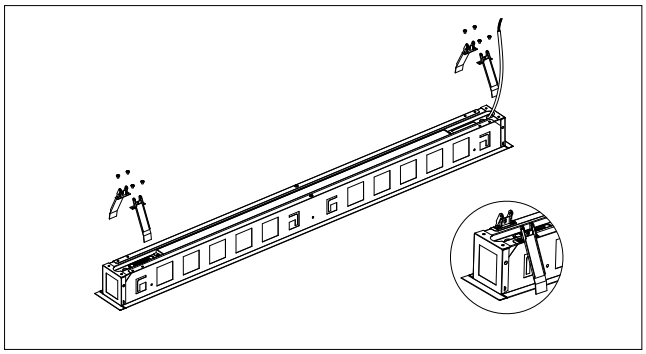

6.Do wiring connection to Main Power as required by code and local regulations. Align fixture to pre-cut hole on drywall and insert fixture.

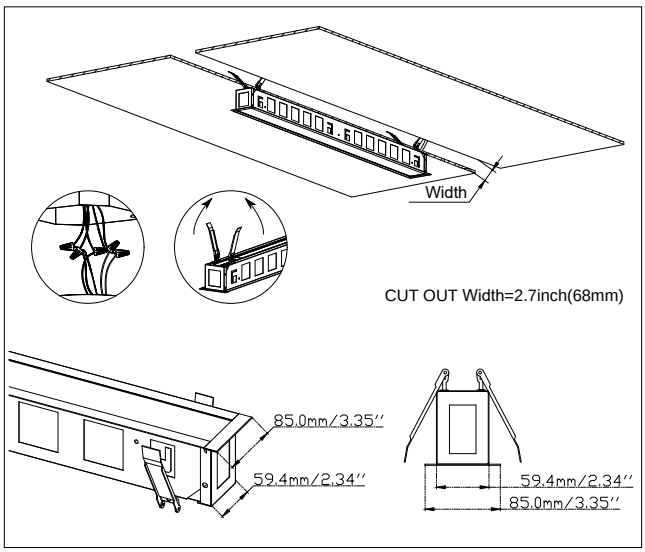

7.The installation is completed.

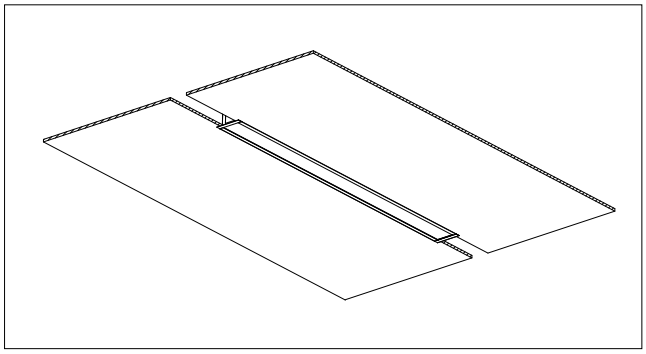

CAUTION

Please isolate two dimming wires(pink and purple) by P2 terminal individually if no need dimming;
MUST connect wires with corresponding colors.

Installation Instruction

Positoning plate guide(Taking 4FT Products as an example)

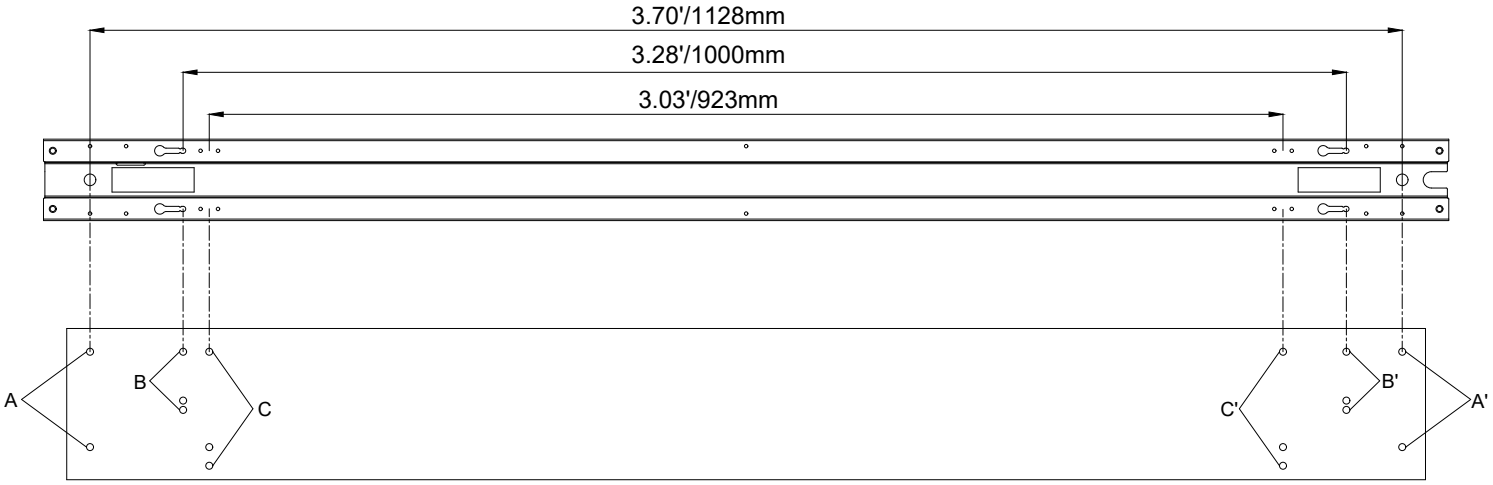

A, A' for suspending mounting
B, B' for surface mounting without using brackets
C, C' for surface mounting by using brackets as well as wall mounting

Installation Instruction

Additional Accessories

- AC input sensor BRI810-B-D

1.Fix the sensor inside the canopy with screws.(Figure 1)
2.Make wiring connection refer to General Wiring Diagram. Use appropriate UL approved wire connectors as required by code.(Figure 2)

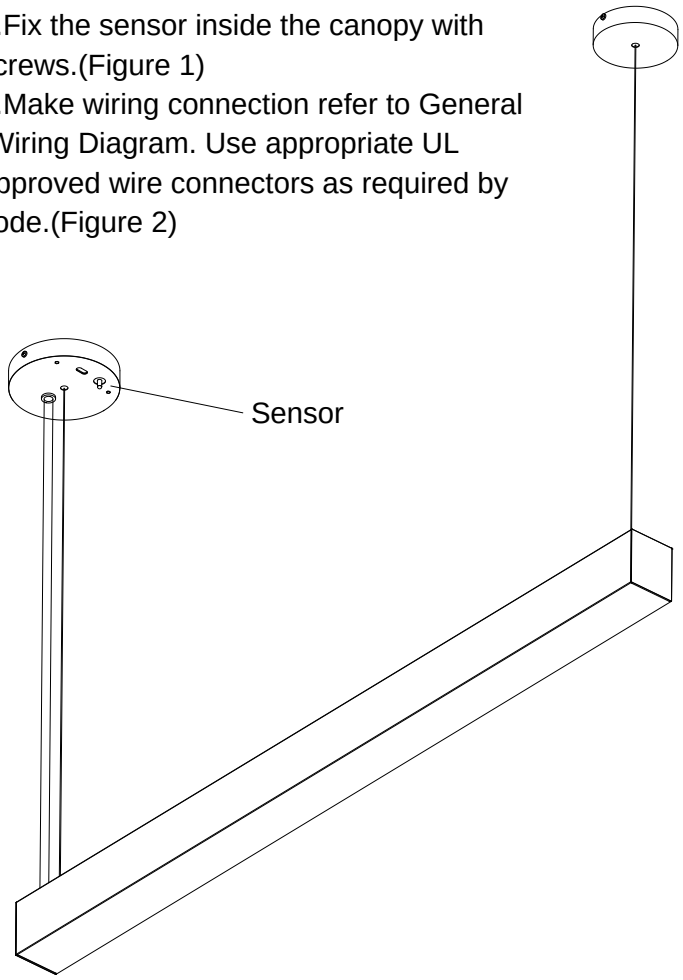

Figure 1

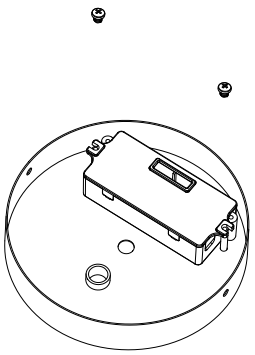

Figure 2

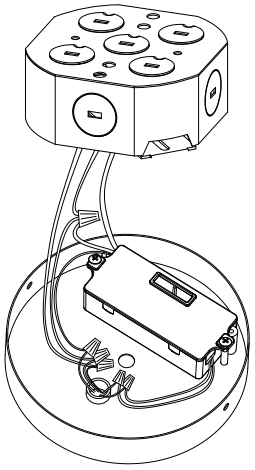

General Wiring Diagram

