OJ-M713-B Series Dimming Receptacle

OJ-M713-B-5P **Dimming Receptacle**

- Accepts ANSI standard dimmable photocells to provide a connection between the photocell and the luminaire
- Available with two or four dimming contacts to support one or two channel dimming protocols
- Three robust twist lock contacts for a reliable power interconnect
- Receptacle comes pre-terminated with wire leads for ease of integration into new or existing light fixtures
- It can support 0-30 VDC dimming method or digital optional lighting interface (ORG/BRN), which is very suitable for outdoor commercial and public lighting.

Application

- Street and roadway lighting
- Light controller
- Parking lot lighting

Advantage

- Accept ANSI standard dimmable photoresistor to make interconnection between photoresistor and lighting
- Provide 2 or 4 dimming contacts, support 1 or 2 channel dimming protocol
- Robust twist-lock contacts for reliable power interconnection
- The receptacles are pre-terminated by wire leads for integration into new or existing lamps
- Provides wire insulation suitable for lighting equipment with a rated temperature of 105°
- The length of wiring can be customized according to customer requirements

Specifications：			
Power loading	480VAC，Max 15A，Max	Flammability	UL 94,V-0
Signal loading（V）/（A）	0-30 VDC, 250 mA Max	IP Protection	IP66
Power Contact material	brass	Pole number	3,5,7
Insulation material	PBT	Ambient Temperature（℃）	-40 to 70℃

Product type	connector
Connector system	Wire to part
Sealable	YES
IP rated	IP66
Connectors and terminals are connected to	Wires and cables
MECHANICAL feature	
Rotatable	NO
Number of Positions	3Pin , 5Pin , 7Pin
ELECTRICAL feature	
Operating Voltage (VAC)	480Vac
Operating Voltage (VDC)	0-30Vdc
Power contacts rated current (maximum) (A)	15A
Dimming contacts rated current (maximum) (A)	250mA
Operating Frequency	50/60Hz
MATERIALS	
Power contacts	Copper Alloy, tin over nickel plating
Housing	PBT, UL 94V-0 flammability rated
Color	black
Waterproof gasket color	Black or light-blue
Wiring capacity:	
OJ-M713-B-3P	Power loading：14AWG （black,red,white）
OJ-M713-B-5P	Power loading：14AWG （black,red,white） Signal loading：18AWG （pink, purple)
OJ-M713-B-7P	Power loading：14AWG （black,red,white） Signal loading：18AWG （pink, purple,brown,orange)
Working temperature (°C)	-40 to 70
Operation/application	
Circuit application	Power and signal
Industry Standard	
Institutions and standards	ANSI

Product Dimensions :

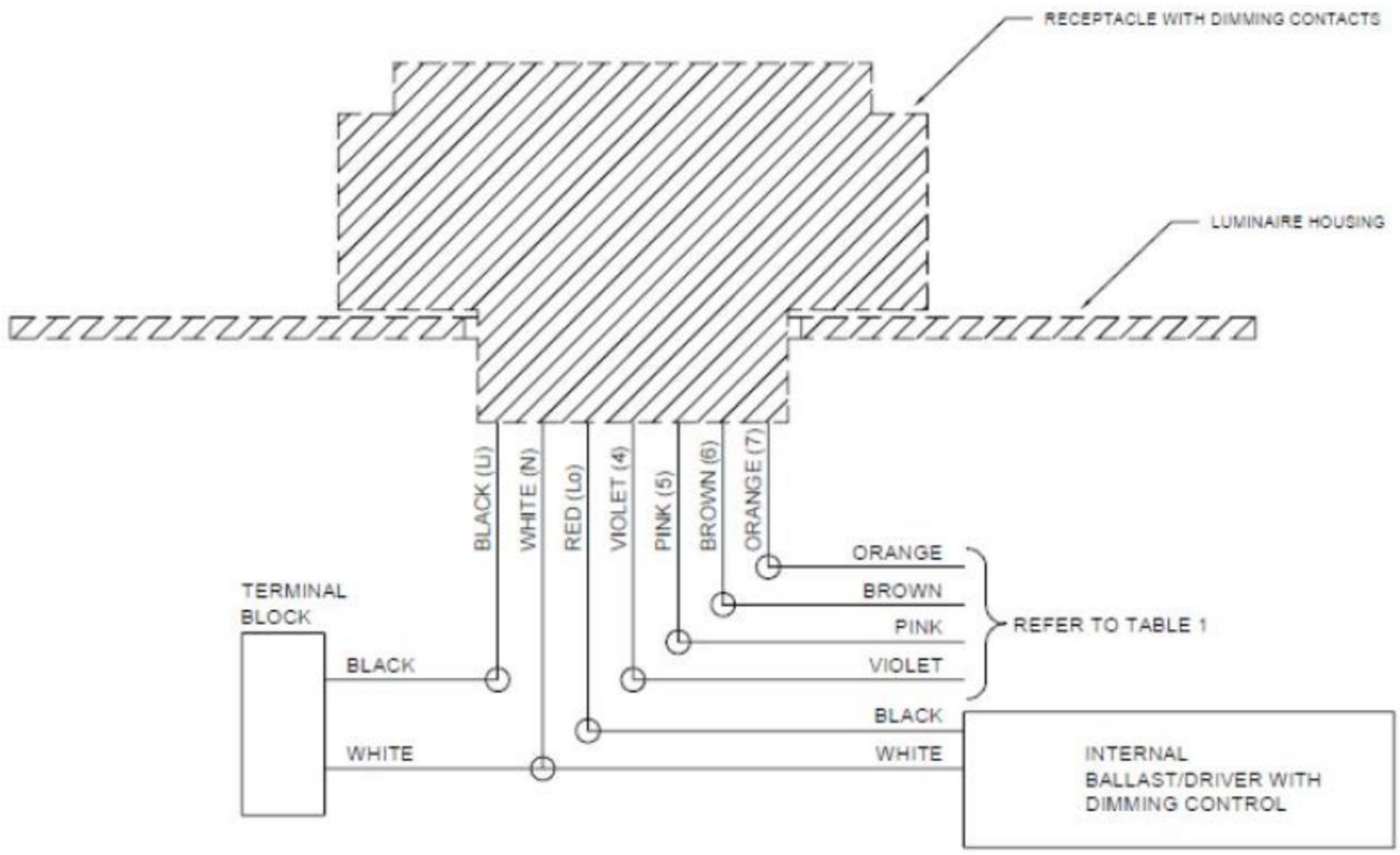

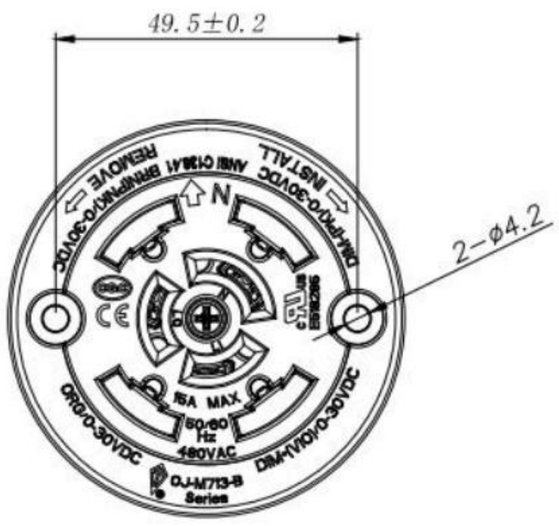

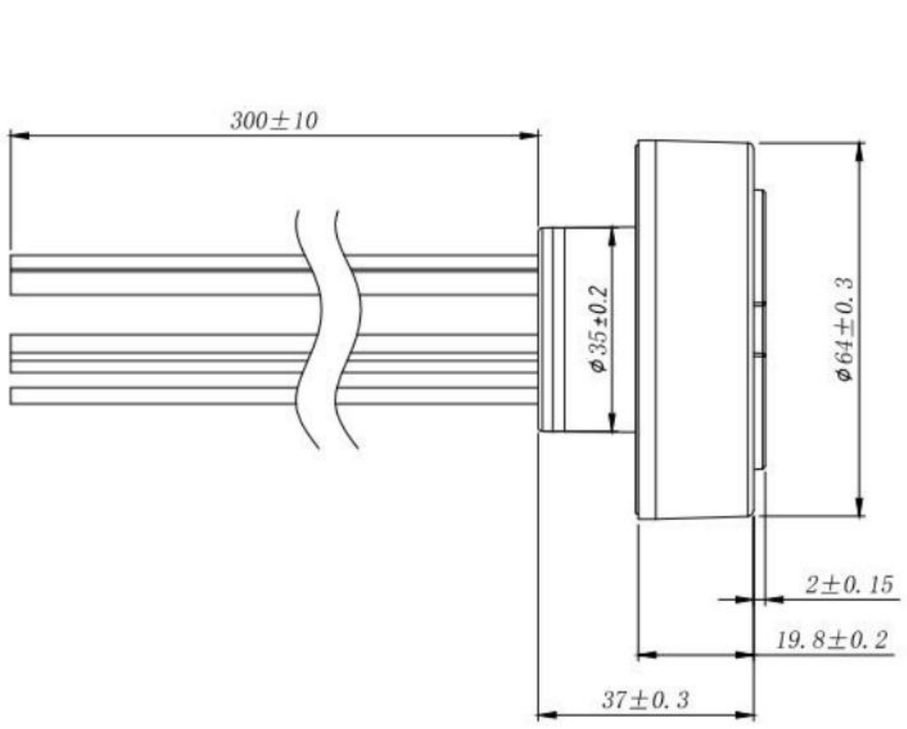

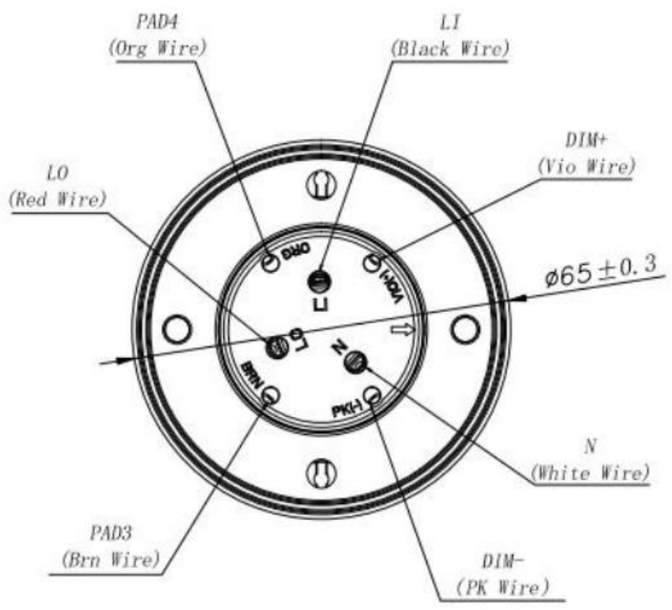

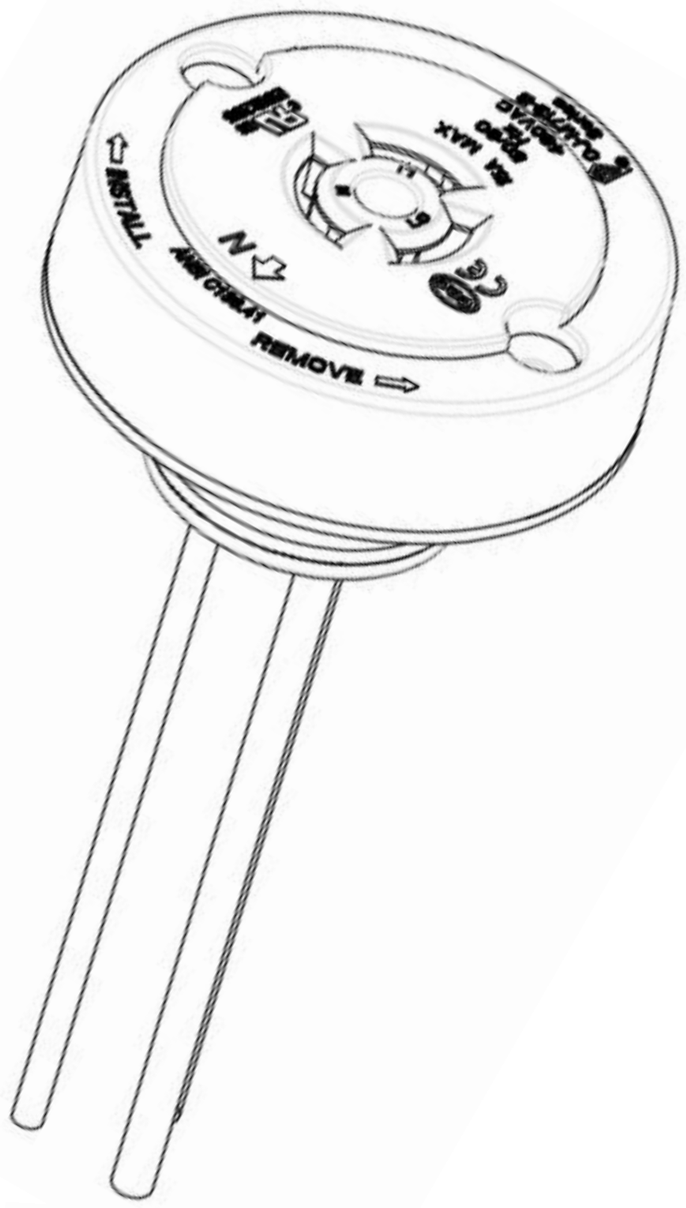
INSTALL
ANSI C136.41
REMOVE

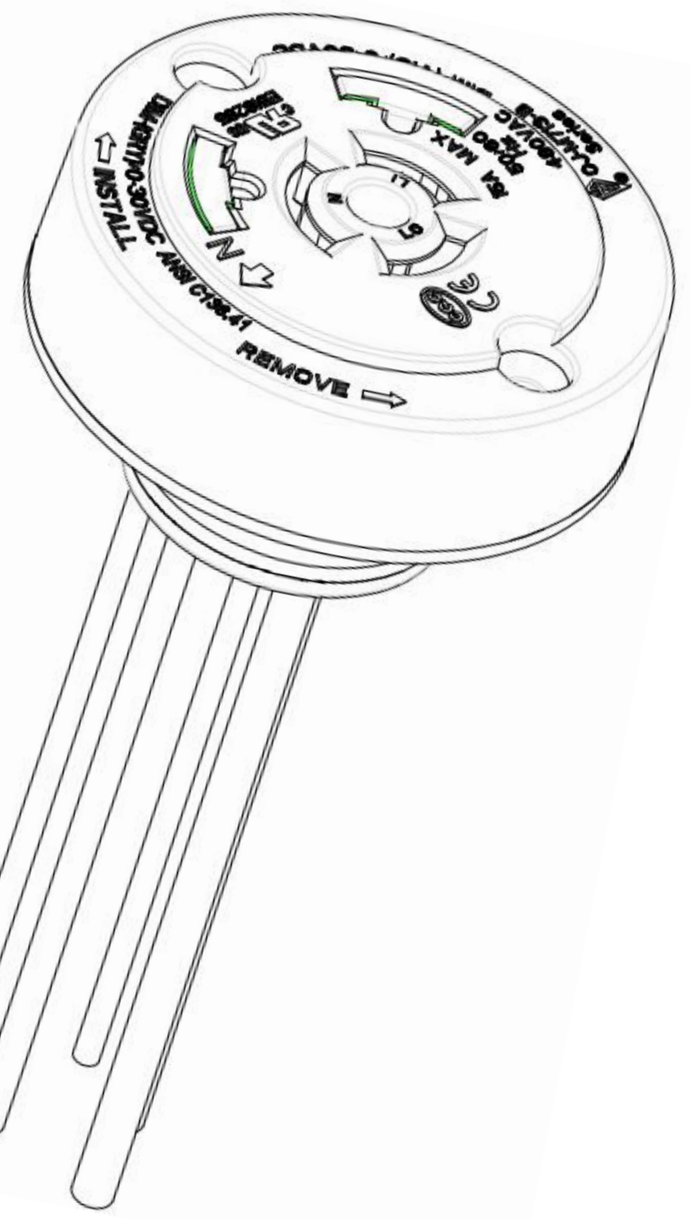
INSTALL
DIM/ANSI 0-30VDC
REMOVE

INSTALL
DIM/ANSI 0-30VDC
BRN(PNK)/0-30VDC
REMOVE