JL-404C

Swiveled Wire-In Electronic Photocontrol



Product Summary

The Photocontrol JL-404C is applicable to control the street lighting, passage lighting and doorway lighting automatically in accordance with the ambient lighting level.
This product is designed with electronic circuits. Its quicker response with time delay of 3-10 seconds offers easy-to-test feature. Especially, model JL-404C provides a wide voltage range for customer applications under almost power supplies.
Further, a preset 3-10 seconds time-delay might avoid mis-operation due to spotlight or lightning during the night time This product has been listed by UL LLC and is comply with the Standard for Non-industrial Photoelectric Switches for Lighting Control UL773A.

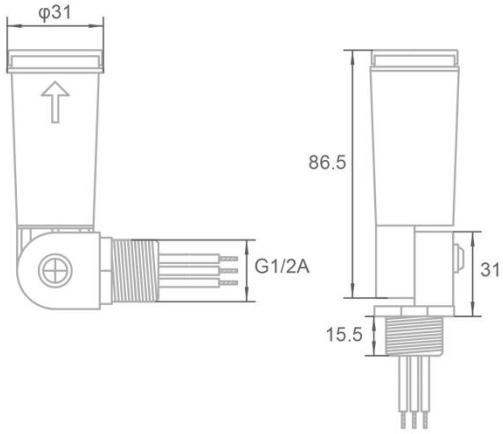

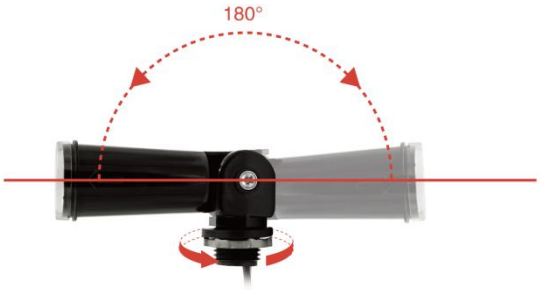

Features

- Direct wire-in
- 3-10s Time delay for luminaires protection
- Swivel Incorporated

Specifications

Model No.	JL-404C
Rated Voltage	120-277VAC
Rated Frequency	50/60Hz
Rated Loading	500W Tungsten, 850VA Ballast 5A e-Ballast
Power Consumption	1.8W@120VAC
Operate Levels	10~20Lx Turn-On / 30~80Lx Turn-Off
Ambient Temperature	-40℃ ~ +70℃
Related Humidity	96%
Leads	AWG #18,105℃ 4" min
Failure Mode	Fail-Off
Certifications	

Installation

Disconnect power, remove junction box cover, place the photocontrol through knockout hole and fasten with locknut.

Wire according to the diagram in below.

Do not install the photocontrol with the Photocell facing artificialor reflected light. This may cause

the unit to cycle on and off at night.

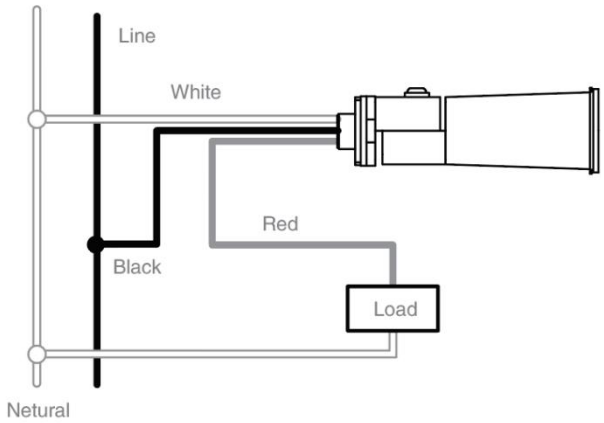

Initial Testing

- It is normal for the SWITCH to take few minutes to turn off when first installed.
- To test "turn on" during daytime, cover its eye with opaque material.
- Do not cover with finger because light traveling through fingers may be great enough to keep the switch open.
- Test will take approximately 1 minutes.

* Operation of this switch is not affected by weather, moisture or temperature changes.

Ordering Information

JL-404CM 18 04 L H M

	1	2	3	4	5	6
JL-404C	M	18	04	L	H	M

1: M(optional)=235J/5KA

2: Lead Rating

18=18 AWG, 105ºC rated

18G=18 AWG 150 ºC rated

3: Lead Length

XX, in inches (04 min.)

4: L = Closed

Q = Notched

5: H = black

K1 = light gray

K2 = dark gray

6: M(option) =UL holographic label

*Default configuration：zinc nut x1, rubber gasket x1

Assemblies

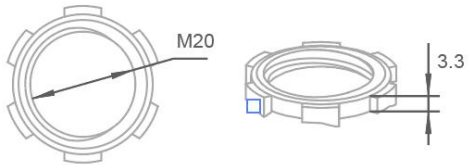

Lock-nut

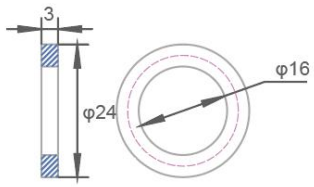

Gasket