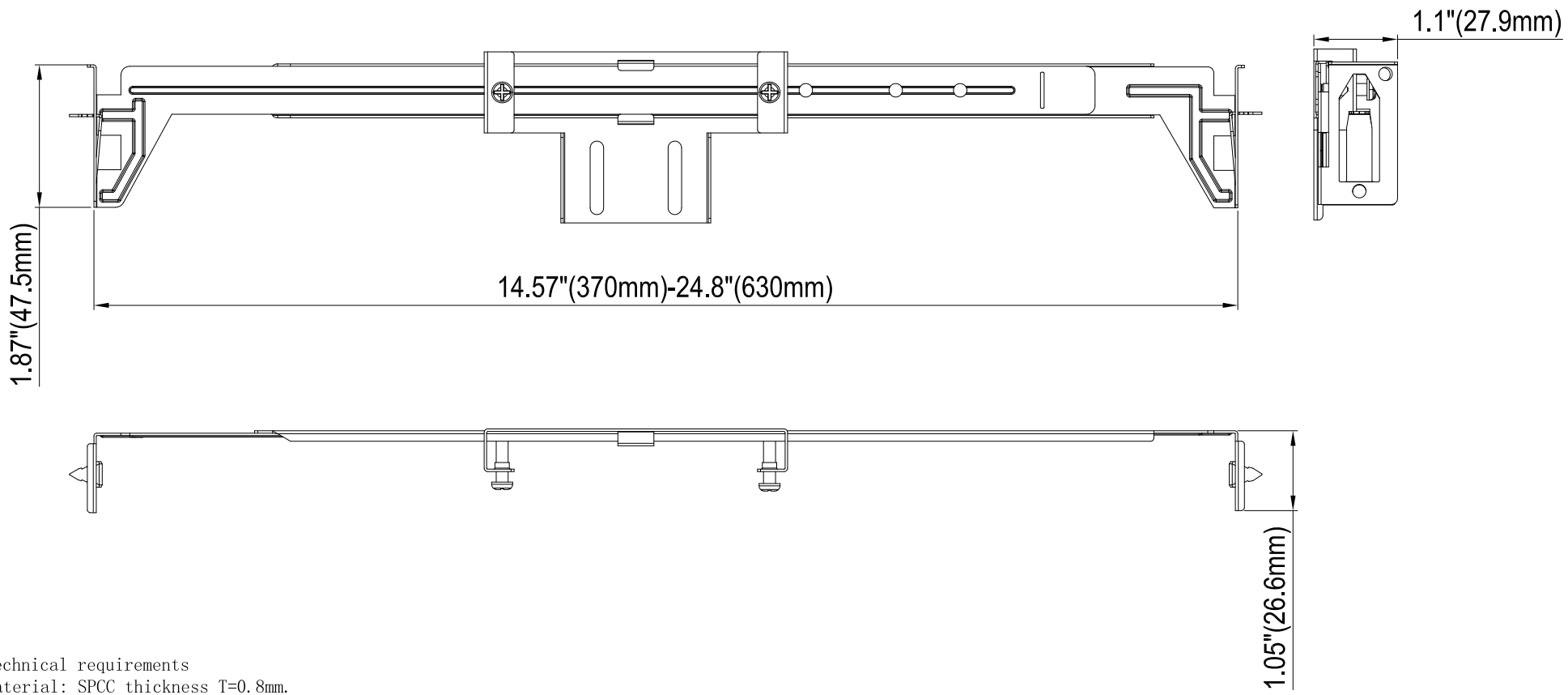

Technical requirements
Material: SPCC thickness T=0.8mm.
2. Comply with RoHS standards

For ordering information, please contact								
			edition	Modifier	Time of modification	Repair the interior		
			A/0	Page 1/1	Tolerance requirements:(tolerance without special requirements)			Date
Material Name	BLD-ACEXX03-0XYOS-ZJ	proportion		Angle	NO ±0.2	mapping		
Specification Description		unit			.x ±0.1	check		
Drawing Number		material quality			.xx ±0.05 .xxx±0.015	examine and verify		