EMERGENCY LED DRIVER

WSD-300YM04W-AC WSD-300YM15W-AC
WSD-300YM08W-AC WSD-300YM20W-AC WSD-300YM25W-AC

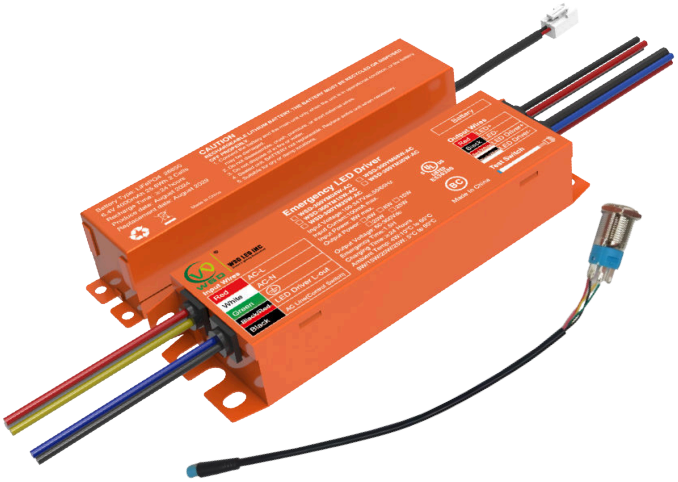

FEATURES

- Split design,external battery for flexible installation and narrow space.
- Constant output power. Self-testing.
- Long life high temperature recyclable LiFePO4 battery, meet 2000 cycles of charge and discharge.
- Includes 2-in 1 test switch and charge indicator light.
- 5 year limited warranty.
- Suitable for use in dry and damp location.
- UL Listed for factory or field installation-UL924 & CSAC22.2 NO.141.
- California Energy Commission (CEC) T20 with BC.

CONSTANT POWER
EMERGENCY OUTPUT

SELF TEST

c UL us LISTED E530386

BC

CE

RoHS

ELECTRICAL SPECIFICATIONS

- Input Voltage:100-347Vac,50/60Hz
- Input Current: 100mA max
- Input Power: 8W max
- Output Power: 4W/8W/15W/20W/25W
- Recharge Time: 24 Hours
- Discharge Time: 90 minutes
- Battery: LiFePO4 battery
- Battery Charging Current: ≤350mA
- Ambient Temp: 4W:10°C to 60°C (50°F to 140°F)
  8W/15W/20W/25W: 5°C to 60°C (41°F to 140°F)

ORDERING GUIDE

Model Number	Input Voltage	Output Voltage	Output Power	Charging Time	Discharging Time	Battery Type
WSD-300YM04W-AC	100-347V AC, 50/60Hz	60-300Vdc	4W	24 Hours	90 minutes	LiFePO4 battery
WSD-300YM08W-AC			8W			
WSD-300YM15W-AC			15W			
WSD-300YM20W-AC			20W			
WSD-300YM25W-AC			25W			

DIMENSIONS

Driver- 5.87"x1.75"x1.01"(149mmx44.5mmx25.6mm) mounting center-5.44"

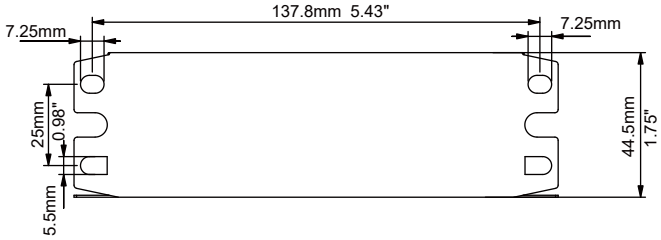

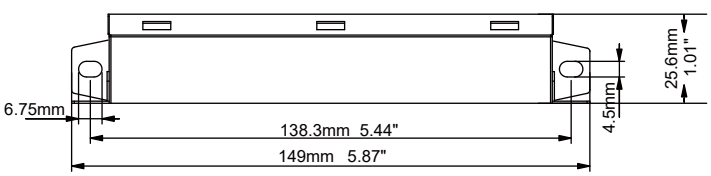

EMERGENCY LED DRIVER

WSD-300YM04W-AC WSD-300YM15W-AC
WSD-300YM08W-AC WSD-300YM20W-AC WSD-300YM25W-AC

BATTERY DIMENSIONS

4W Battery case- 3.39"x1.61"x0.98"(86.2mmx40.8mmx23mm) mounting center-3.12"

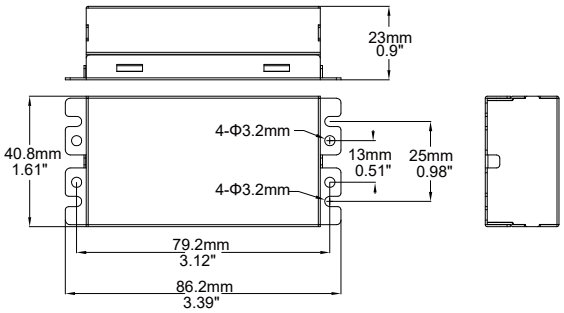

8W Battery case- 6.1"x1.2"x1.18"(155mmx30.5mmx30mm) mounting center-5.83"

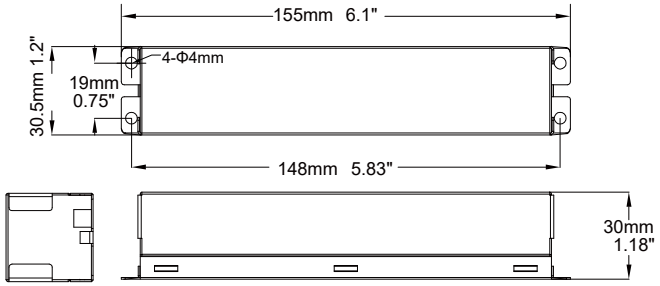

15W/20W/25W Battery case- 6.46"x2.2"x1.22"(164mmx56mmx31mm) mounting center-6.19"

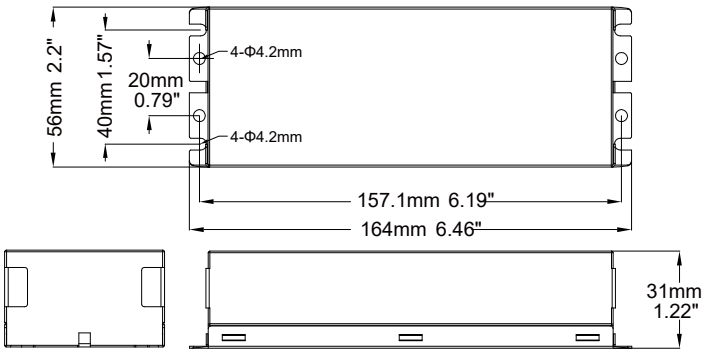

8W Battery case- 3.39"x1.61"x0.91"(86.2mmx40.8mmx23mm) mounting center-3.12"

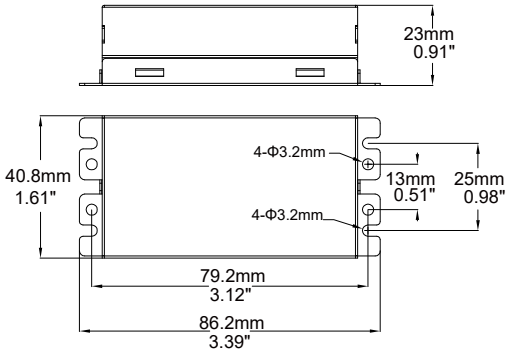

OPTIONAL TEST SWITCH

Metal Test Switch:

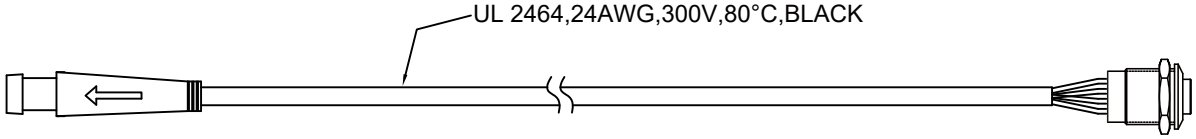

Skinny Film Test Switch:

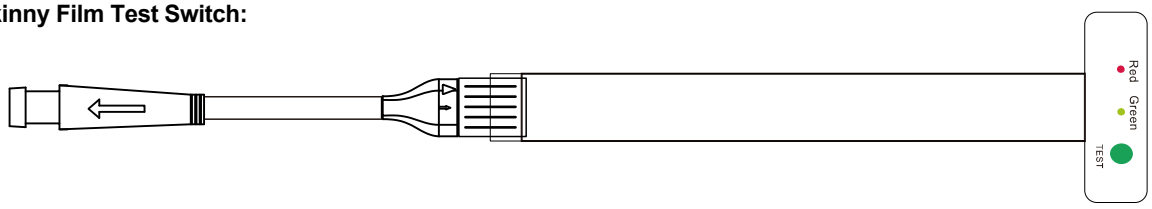

2 In 1 Plastic Test Switch:

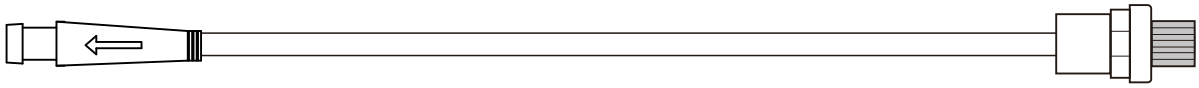

EMERGENCY LED DRIVER

WSD-300YM04W-AC WSD-300YM15W-AC
WSD-300YM08W-AC WSD-300YM20W-AC WSD-300YM25W-AC

SELF-TEST:

This unit contains a control/monitor circuit that if enabled automatically performs a 30-second discharge test once a month and a full 90-minute discharge test once a year. During routine testing, the self-testing emergency driver simulates an AC power failure causing the unit to automatically switch to emergency mode. The unit will monitor the operation of the LED load, battery voltage, and emergency duration. If the emergency system functions properly, then the unit will return to normal mode. Should the unit detect any problems, the indicator light will flash per failure condition (see Troubleshooting Guide) until the condition has been corrected and the unit passes the next test.

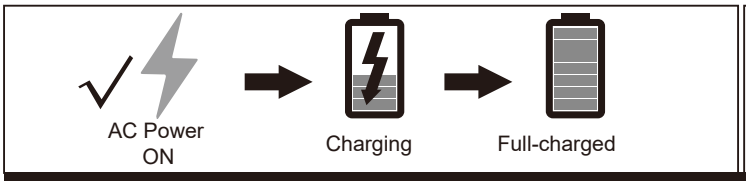

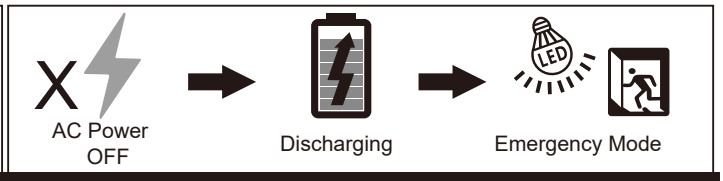

Indicator Light Introduction

① Red/ON: Charging
② Green/ON: Full-charged
③ Indicator light OFF: Discharging(emergency mode)
④ Green/Flashing: Self-testing
⑤ Red Flashing:Error

Note: See Trouble Shooting Guide

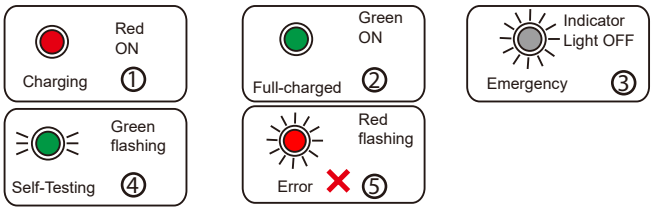

TEST SWITCH INDICATOR STATUS & TROUBLE SHOOTING GUIDE

The charge indicator will be lit Solid Red when charging, and will be lit Solid Green when fully charged and in the standby mode. The indicator will flash Green when self-testing. If a problem is encountered during the test cycle, the indicator will flash Red, according to the diagnostic codes below:

Mode	LED Indicators Status	Error	EM Driver Status / Mode	Corrective Action
Normal Mode	Solid Green	None	Battery fully charged/System OK	/
	Solid Red	None	Battery is charging	/
	Both LEDs OFF	None	In EM mode or emergency run-time is ended	/
	Flashing Green	None	Self-Diagnostic test underway	/
Fault Mode	Flashing Red	Battery	Battery not connected	check battery switch or connection.
			Battery failure	Contact after-sales.
		Hardware issue		1. Check input AC mains wiring of Unswitched Hot,Neutral and Ground. 2.Check light connect. 3.Contact after-sales.

MANUAL TEST

Test Mode	Description	Action	Status	Quit
Fast Test	Quick discharge test	Press the test button 1 time	LED load will light up for 5s	/
Monthly	30 second test	Press the test button 3s continuously	LED load will light up for 30s	Hold the test button/switch for 1s
Annually	90 minute test	Press the test button 6s continuously	LED load will light up for 90 minutes	Hold the test button/switch for 1s

EMERGENCY LED DRIVER

WSD-300YM04W-AC WSD-300YM15W-AC
WSD-300YM08W-AC WSD-300YM20W-AC WSD-300YM25W-AC

INSTRUCTION MANUAL

IMPORTANT SAFEGUARDS

When using electrical equipment, basic safety precautions should always be followed including the following:

CAUTION:Before installation, make certain the AC power is off.

READ AND FOLLOW ALL SAFETY INSTRUCTIONS.

- CAUTION: This emergency LED driver provides more than one power supply output source.To reduce the risk of electrical shock, servicing of this equipment should be performed by qualified personnel only.
- CAUTION: Do not connect the battery pack connector until all other wiring are complete and AC power is on.
- CAUTION: This emergency LED driver requires an un-switched AC power source of 100-347Vac,50/60Hz .The AC driver must be on the same branch circuit as the emergency LED driver. Ambient temperature: (4W:10°C to 60°C/ 8W/15W/20W/25W:5°C to 60°C).
- CAUTION: The use of accessory equipment not recommended by the manufacturer may cause an unsafe condition, void warranty, and result in non-compliance with UL specifications.
- CAUTION: Use with grounded,UL listed,dry,or damp location-rated fixtures,and the case should be grounded.Use only within an enclosure.
- CAUTION: Do not use outdoors.Do not mount near gas or electric heaters.
- CAUTION- Do not attempt to service the battery. A sealed, non-maintenance battery is used that is not field replaceable. Replace the entire unit when necessary.
- CAUTION: Do not use this equipment for other than its intended use. The emergency LED driver is not for in an air-handling fixture.
- CAUTION: The emergency LED driver should be mounted in locations and at heights where it will not be subjected to tampering by unauthorized personnel.
- The instruction manual shall include the word "CAUTION" and the following statement or equivalent "Verify that all replacement lamp types marked on the installed luminaire are also identified as suitable for use with this emergency battery pack."
- IMPORTANT: Please charge the battery consistently for >24 hours for the first time usage to activate the whole battery cells of discharging/charging duration.
- The equipment is intended for ordinary locations and for permanent installation into one or more Listed emergency luminaires.
- IMPORTANT: Customers are advised to charge emergency LED drivers 24 hours every 6 months during storage, which could be stocked for 1 year at most. If customers don't install and recharge for more than 1 year, the batteries may be damaged. This is not covered in the warranty, and we would charge for replacement.
- IMPORTANT: Lighting fixture manufacturers, electricians, and end-users need to ensure product system compatibility test before using and final installation.

c UL us LISTED

LiFePO4

THIS PRODUCT CONTAINS A RECHARGEABLE LIFEPO4 BATTERY.
THE BATTERY MUST BE RECYCLED OR DISPOSED OFF PROPERLY.

WIRING DIAGRAM

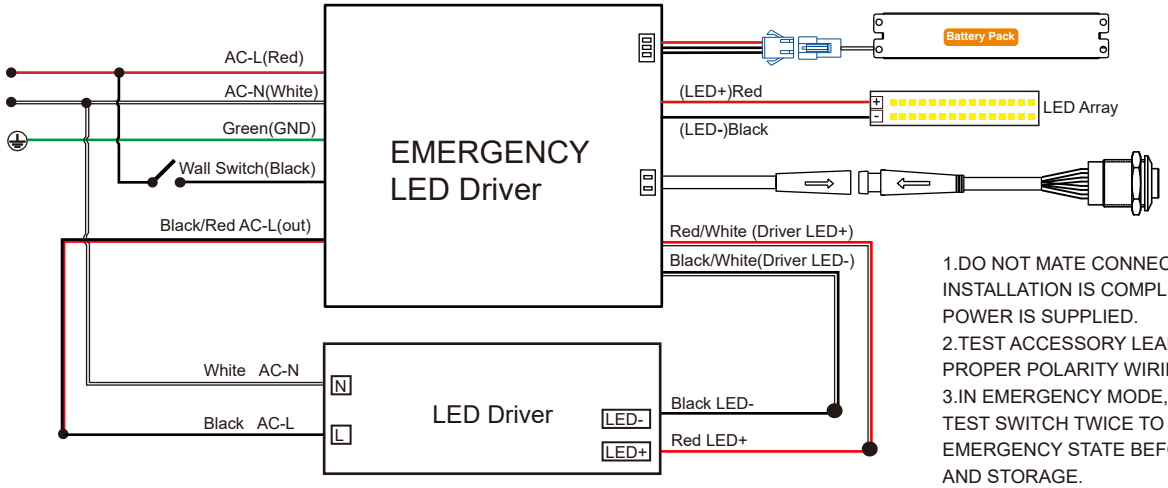

1.DO NOT MATE CONNECTOR UNTIL INSTALLATION IS COMPLETE AND AC POWER IS SUPPLIED.
2.TEST ACCESSORY LEADS-OBSERVE PROPER POLARITY WIRING.
3.IN EMERGENCY MODE,PRESS TEST SWITCH TWICE TO CUT OFF THE EMERGENCY STATE BEFOR SHIPMENT AND STORAGE.

For ordering information, please contact sales@ilighting.com