WSD-170YT08W-AC
EMERGENCY LED DRIVER

New Design



c UL us LISTED E530386

BC

CONSTANT POWER EMERGENCY OUTPUT



NOTE: leading-out wires left or right are optional, please advise before order.

FEATURES

- Patent design ideal for Ultra-thin back-lit panel lights, easy to install and fix.
- Easy wiring,directly connect to AC INPUT of LED driver, suitable for CCT selectable lighting fixture.
- No need flex conduit and connector, high cost performance.
- Constant output power. Built-in Lithium Battery.
- Patent design with 12V auxiliary source
- Protections: Input over current projection,output over
- charge protection,output over discharge protection,output short circuit protection.
- UL listed for factory or field installation-UL924& CSA C22.2 NO.141.
- Compliance with NFPA 101 life Safety Code and CEC (CA Title 20).

ELECTRICAL SPECIFICATIONS

- Input Voltage:100~347Vac,50/60Hz
- Input Current: 100mA max
- Input Power: 6W max
- Output Voltage: 170V DC
- Emergency Power: 8W
- Recharge Time: 24Hrs
- Discharge Time: 90 minutes
- Battery: Li-ion Battery
- Ambient Temp: 5°C-50°C(41°F to 122°F)

DIMENSIONS

Driver-19.09"x1.3"x1.06"(485mmx33mmx27mm) Mounting center-18.23"(463mm)

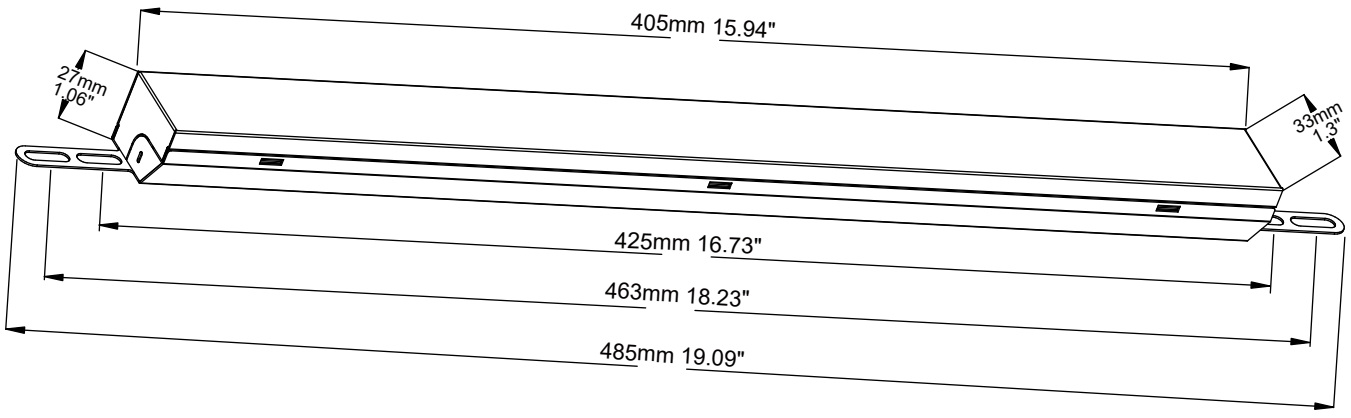

WSD-170YT08W-AC
EMERGENCY LED DRIVER

OPTIONAL ACCESSORY

BLD-JT-R-TZ-053 **Dimensions:** 3.3"x1.69"x1.05"(83.7mmx43mmx26.7mm)

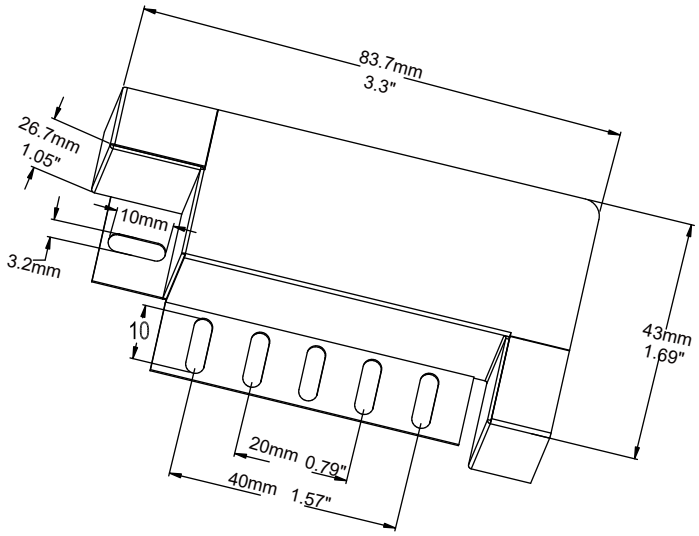



BLD-JT-R-TZ-064 **Dimensions:** 3.3"x1.69"x1.05"(83.7mmx43mmx26.7mm)

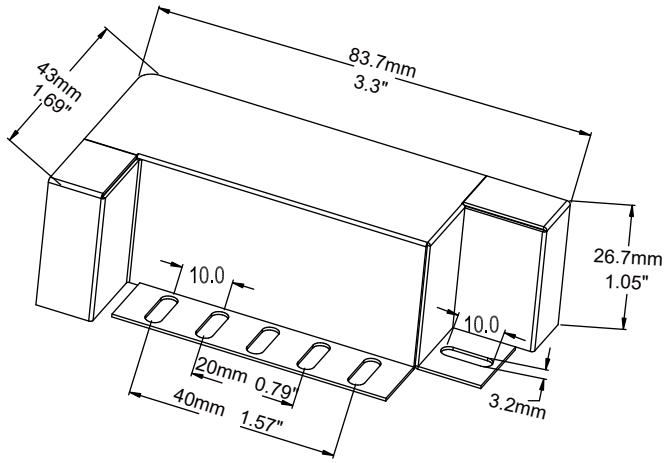

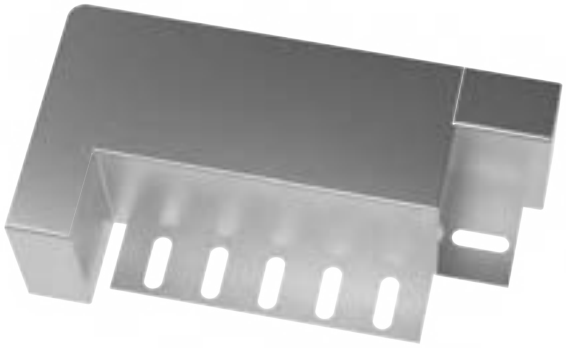

BLD-JT-R-TZ-063 **Dimensions:** 3.3"x3.3"x1.05"(83.9mmx83.9mmx26.7mm)

