INSTALLATION
AND OPERATING INSTRUCTIONS

TOOLS REQUIRED

- Electric drill
- Phillips head screw driver
- 9/16" Drill bit
- Standard head screw driver

CAUTION

Before installing your track lighting Kit,refer to the section entitled "Electrical Connections" if you feel you do not have electrical wiring experience, qualifled,licensed electrician,The important safeguards outlined in these instructions are meant to cover all possible conditions and situations that may occur. if must be understood that common sense,caution and care are factors which cannot be built into any product.The factors must be supplied by the person(s) caring for and operating the fixture.

1.Your track kit includes the following:

- 1-four foot track
- 1-floating canopy with power feed
- 3-Track heads
- All necessary hardware

2.All electrical connections must be made in accordance with local codes,ordinances ou National Electrical Code.If you are unfamiliar with methods of installing electrical wiring,secure the services of a qualified,licensed electrician.

3.This fixure is intended to be mounted to a standard electrical outlet box. power should be supplied by a 120V single circuit.The box must be directly supported by the building structure.

IMPORTANT

Before starting installation,disconnect the power by turning off the circuit breaker or by removing the fuse at the fuse box.TURNING THE POWER OFF USING THE LIGHT SWITCH IS NOT SUFFICIENT TO PERVENT ELELCTRICAL SHOCK.

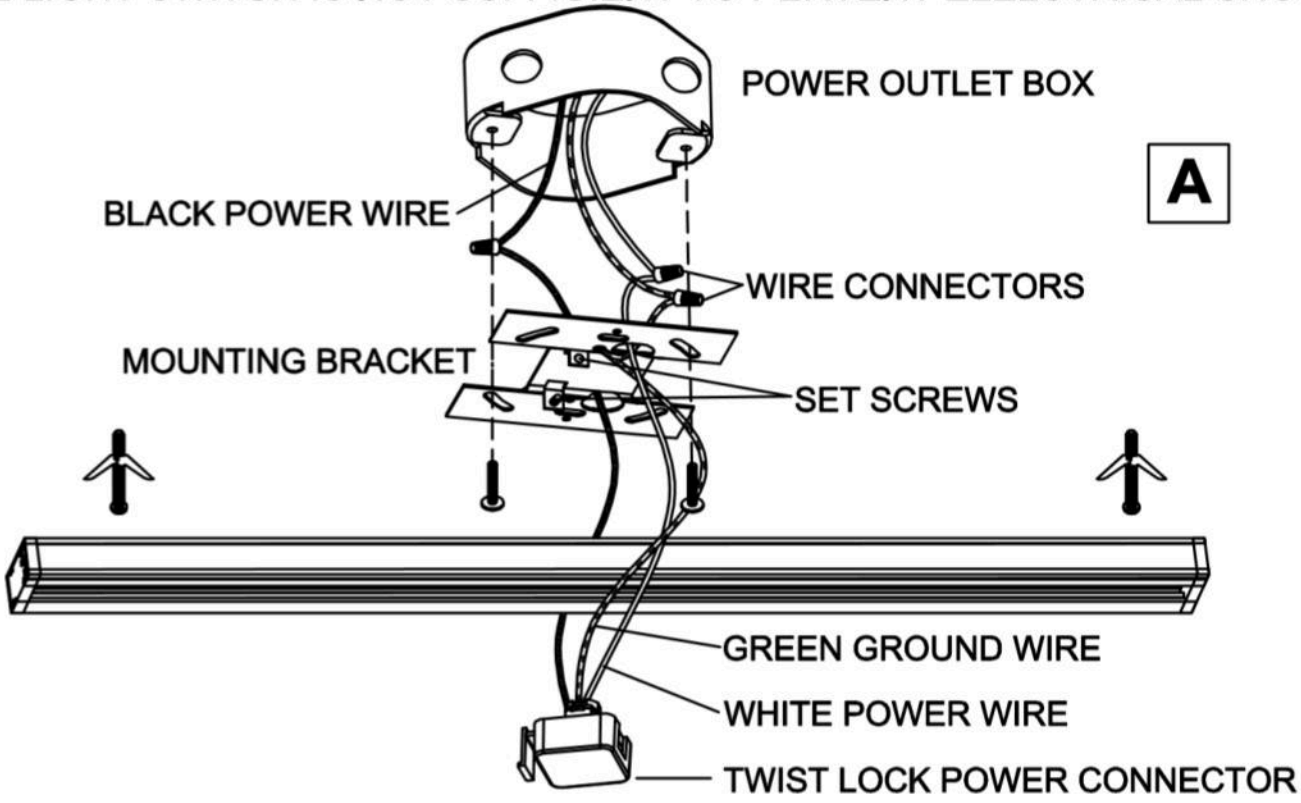

4.Check circuit load carefully,Themaximum electrical capacity of this track system is 15 amps per circuit for permanent installations.A standard 120V 15A circuit is designed to carry a maximum of 1800 watts,therefore,we recommend that the total wattage of all the lights and appliances persently attacked to the circuit should not exceed 1440 watts or 80% of the maximum electrical capacity.

ELECTRICAL CONNECTIONS

IMPORTANT:MAKE SURE POWER IS OFF AT THE FUSE OR CIRCUIT BREAKER BOX PRIOR TO ANY FURTHER INSTALLATION.

1.If you are replacing an existing fixture,disconnect and remove the old fixture and expose the power supply wires.

2.Position the track bar over the outlet box where it is to be installed.Mark the location of the two mounting holes at each end of the track.(See illustration B). next,drill 9/16" holes where marked.IMPORTANT:Do not mount track to ceiling at this time.

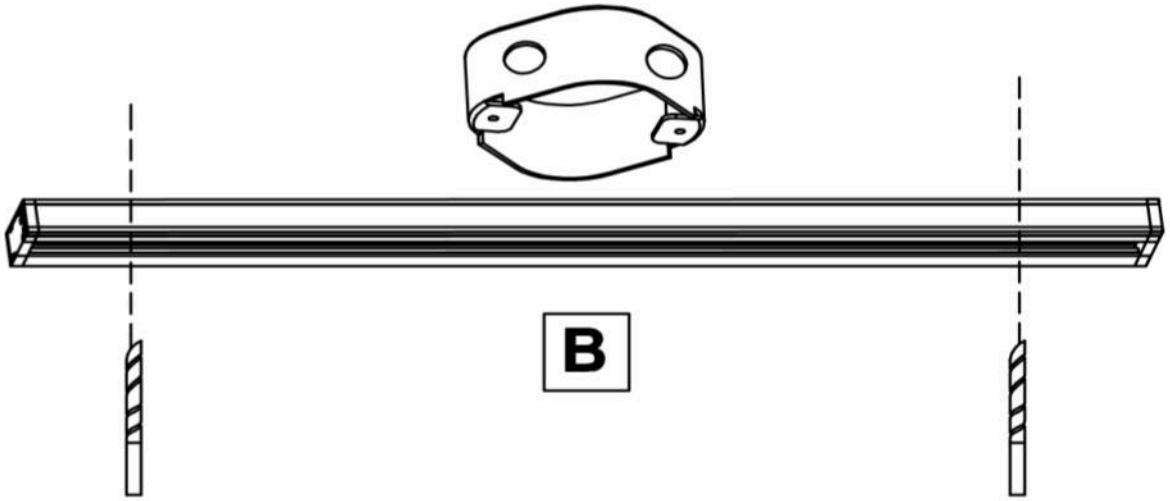

3.Take the twist lock power connector and insert the white and green wires through the hole on one side of the mounting bracket and black wire through the opposite hole.(See illustration A).

4.Using the three wire connectors included in the hardware mounting package. Position the wires as follows.(See illustration A.)

Attack the black supply wire to the black wire from the twist lock power connector and secure with a wire connector.

Attack the white wupply wire to the white wire from the twist lock power connector and secure with a wire connector.

After connection are made,check to make sure no loose strands of wire are exposed.

5.Attack track mounting bracket to power outlet box using screws provided. (See illustration A).Slide track bar in place so that black power wire is positioned on

one side of track and the white & green wires on the other side.

6.Attack track to ceiling by lining up with previously drilled holes and securing with toggle bolts.Tighten mounting bracket set screws to eack side of track. (See illustration C).

7.Attack the twist lock power connector to the track by pushing into position on the track bar.Turn 90° to lock into place.(See illustration C).

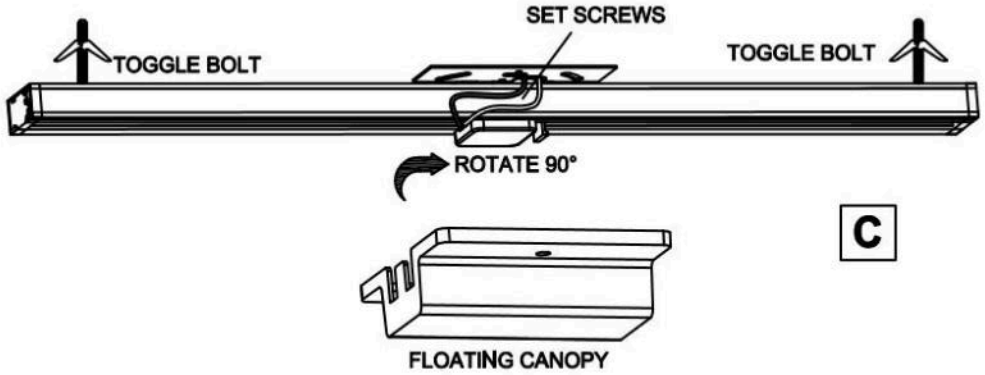

C

TRACK HEAD INSTALLATION

1.Place track head in desired position and insert top of track head connector into track.
2.Rotate connector 90° until track head locks into place on track.(See Illustration D).IMPORTANT:If connector does not turn freely,do not forcel instead,turn in opposite direction.
3.To reposition or remove track head,pull down on the connector and rotate 90°.

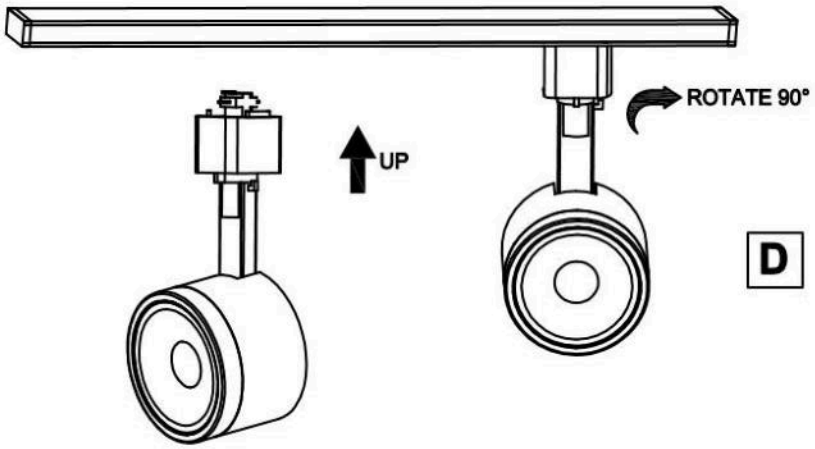

D

CAUTION:refer to the relamping label located near the lampholder for recommended maximum wattage.Do not exceed recommended wattage.

NUVO LIGHTING®

A Satco Product

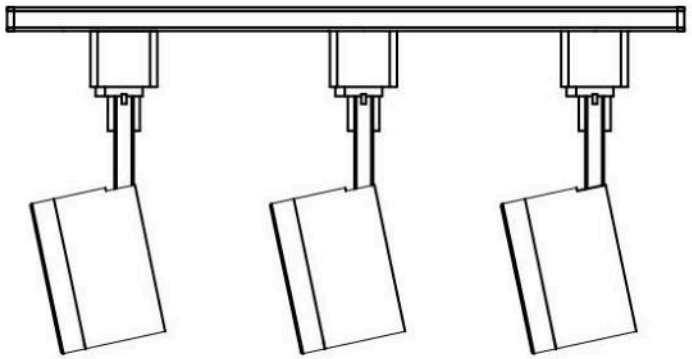



TK403
TK404
TK407



TK413
TK414
TK417



TK423
TK424
TK427

YOU'VE JUST PURCHASED A LIGHTING PRODUCT DESIGNED AND BUILT TO PROVIDE YOU WITH MANY YEARS OF ENJOYMENT.

PLEASE FAMILIARIZE YOURSELF WITH THE FOLLOWING INSTRUCTIONS AS THIS WILL HELP INSURE AN ERROR FREE INSTALLATION.