SATCO | NUVO

LED MR16 LAMPS

GLASS



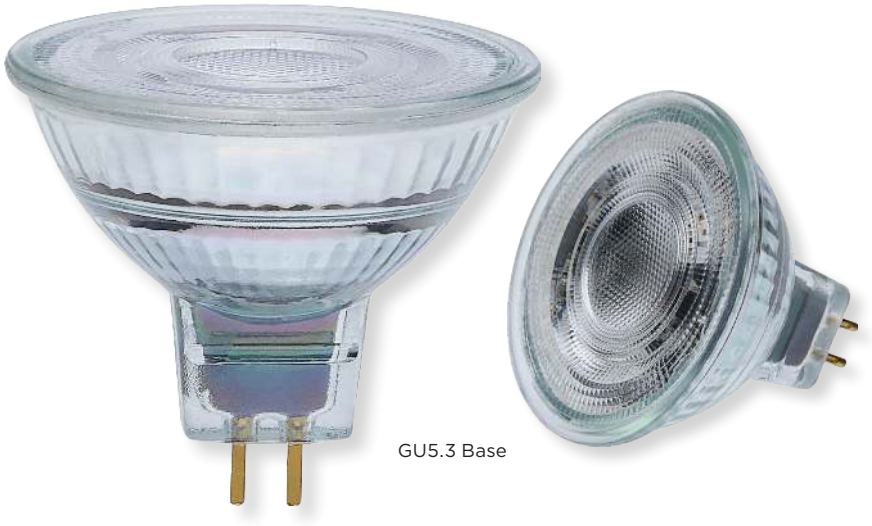

GU5.3 Base



GU10 Base

AVAILABLE WITH GU5.3 OR GU10 BASE

EXCELLENT COLOR RENDERING

12V AND 120V MODELS OFFERED

GLASS HOUSING PROVIDES PERFORMANCE SIMILAR TO HALOGEN

APPLICATIONS:

Downlighting
Cabinets
Accent Lighting
Track Lighting

SATCO MR16 lamps are available with GU5.3 and GU10 bases, for versatile lighting solutions in 12V and 120V applications. These lamps are offered in a wide range of color temperatures, from a warm 2700K, to a bright 6500K, and provide high color accuracy with a 90 CRI rating. Dimmable for customizable lighting, they are also damp location rated, and suitable for use in enclosed fixtures. Perfect for a variety of residential and commercial applications, SATCO MR16 lamps combine efficiency, durability, and high-quality lighting.

90 CRI | DIMMABLE | DAMP LOCATION | ENCLOSED FIXTURE | 25,000 HOURS | TRUSTED NLB WARRANTY | 5 YEAR WARRANTY | TITLE 20

GENERAL SPECIFICATIONS

Frequency: 60Hz
Power Factor: 0.7
THD %: 50%
Dimming: Phase-cut dimmable down to 20%
Efficacy: 90 LPW
CRI: 90
Location Rating: Damp

Ambient Operating Temperature: -25°C (-13°F) to +45°C (+113°F)
Rated for Enclosed Fixtures: Yes
Construction: Glass
Lens Construction: Polycarbonate
Functional Life: 25,000 Hours
Warranty: 5 Years

ITEM SPECIFICATIONS / ORDER INFO

Item	Beam Angle	Base	CCT	Voltage	Lumens	Wattage	Halogen Replacement Wattage	Input Current
S12360	15°	GU5.3	2700K	12V	500	5.5W	50W	0.46A
S12361	15°	GU5.3	3000K	12V	500	5.5W	50W	0.46A
S12362	15°	GU5.3	3500K	12V	500	5.5W	50W	0.46A
S12363	15°	GU5.3	4000K	12V	500	5.5W	50W	0.46A
S12364	15°	GU5.3	5000K	12V	500	5.5W	50W	0.46A
S12365	36°	GU5.3	2700K	12V	500	5.5W	50W	0.46A
S12366	36°	GU5.3	3000K	12V	500	5.5W	50W	0.46A
S12367	36°	GU5.3	3500K	12V	500	5.5W	50W	0.46A
S12368	36°	GU5.3	4000K	12V	500	5.5W	50W	0.46A
S12369	36°	GU5.3	5000K	12V	500	5.5W	50W	0.46A
S12370	36°	GU5.3	6500K	12V	500	5.5W	50W	0.46A
S12371	36°	GU10	2700K	120V	500	5.5W	50W	0.46A
S12372	36°	GU10	3000K	120V	500	5.5W	50W	0.46A
S12373	36°	GU10	3500K	120V	500	5.5W	50W	0.46A
S12374	36°	GU10	4000K	120V	500	5.5W	50W	0.46A
S12375	36°	GU10	5000K	120V	500	5.5W	50W	0.46A

DIMENSIONS / WEIGHTS

Item	Length (A)	Width (B)	Weight
S12360	1.73"	1.97"	0.10 Lbs
S12361	1.73"	1.97"	0.10 Lbs
S12362	1.73"	1.97"	0.10 Lbs
S12363	1.73"	1.97"	0.10 Lbs
S12364	1.73"	1.97"	0.10 Lbs
S12365	1.73"	1.97"	0.09 Lbs
S12366	1.73"	1.97"	0.09 Lbs
S12367	1.73"	1.97"	0.09 Lbs
S12368	1.73"	1.97"	0.09 Lbs
S12369	1.73"	1.97"	0.09 Lbs
S12370	1.73"	1.97"	0.09 Lbs
S12371	2.05"	1.97"	0.13 Lbs
S12372	2.05"	1.97"	0.13 Lbs
S12373	2.05"	1.97"	0.13 Lbs
S12374	2.05"	1.97"	0.13 Lbs
S12375	2.05"	1.97"	0.13 Lbs

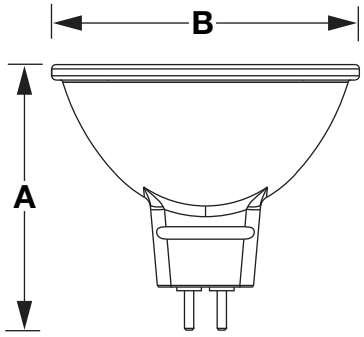

S12360 — S12370

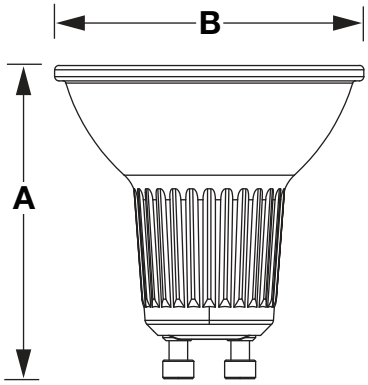

S12371 — S12375

This device complies with Part 15 of the FCC Rules. Operation is subject to the following two conditions: (1) this device may not cause harmful interference, and (2) this device must accept any interference received, including interference that may cause undesired operation.
Meets requirements of ICES-005 issue 5 class B for use in residential applications.
Lamps may not be compatible with all dimmers. See satco.com for dimming compatibility.
WARNING: Some products included in this specification sheet may be subject to the warning requirements of California's Proposition 65.
Please refer to your product packaging for more information.
Replacement wattage shown depends on application and fixture.
Specifications are subject to change without prior notice.

© Satco Products, Inc. All rights reserved. 1/25 SN1756