SATCO | NUVO

LED RANGE VOLTAGE PAR LAMPS

120V-277V





RANGE VOLTAGE 120V-277V FOR RESIDENTIAL AND COMMERCIAL USE

90 CRI FOR EXCEPTIONAL COLOR RENDERING

WET LOCATION RATED FOR USE OUTDOORS

WIDE BEAM ANGLE FOR BROAD FLOODLIGHT ILLUMINATION

SUGGESTED APPLICATIONS
Recessed lighting,
Track lighting, Security lighting,
Landscape lighting

SATCO|NUVO's PAR Range Voltage lamps are designed for application in 120V-277V fixtures. With crisp, 90 CRI light output in 3000K, 4000K, and 5000K, they're an ideal lamp for residential, commercial, hospitality, general lighting, recessed downlighting and task lighting. And, with a wet location rating, these are also perfect for use outdoors.

90 CRI | WET LOCATION | TITLE 20

SATCO.COM | 800-437-2826

© Satco Products, Inc. All rights reserved. Rev. 7/24 SA2986

LED RANGE VOLTAGE PAR LAMPS
120V-277V

GENERAL SPECIFICATIONS

Range Voltage: 120V-277V
Frequency: 60Hz
Power Factor: 0.9
THD%: 26%
Dimmable: Non-Dimmable
CRI: 90

Functional Life: 15,000 Hours
Location Rating: Wet
Ambient Operating Temperature: -20°C (-4°F) to +40°C (+104°F)
Enclosed Fixture Rating: No
Construction: Glass
Lens: Polycarbonate

ITEM SPECIFICATIONS / ORDER INFO

Item	Shape	Lumens	Wattage	Incandescent Replacement Wattage	Efficacy	Input Current @120V-277V	CCT	Beam Angle	CBCP (cd)
S11494	PAR20	450	7W	50W	64 LPW	0.06-0.03A	3000K	35°	750
S11495	PAR20	450	7W	50W	64 LPW	0.06-0.03A	4000K	35°	750
S11496	PAR20	450	7W	50W	64 LPW	0.06-0.03A	5000K	35°	750
S11497	PAR30	900	12W	75W	75 LPW	0.10-0.04A	3000K	35°	1,700
S11498	PAR30LN	900	12W	75W	75 LPW	0.10-0.04A	4000K	35°	1,700
S11499	PAR30	900	12W	75W	75 LPW	0.10-0.04A	5000K	35°	1,700
S11486	PAR38	1,200	15W	90W	80 LPW	0.13-0.05A	3000K	40°	1,600
S11487	PAR38	1,200	15W	90W	80 LPW	0.13-0.05A	4000K	40°	1,600
S11488	PAR38	1,200	15W	90W	80 LPW	0.13-0.05A	5000K	40°	1,600

DIMENSIONS

Item	MOL	MOD	Weight
PAR20	3.27"	2.52"	0.21 Lbs.
PAR30/LN	4.65"	3.74"	0.45 Lbs.
PAR38	5.04"	4.80"	0.74 Lbs.

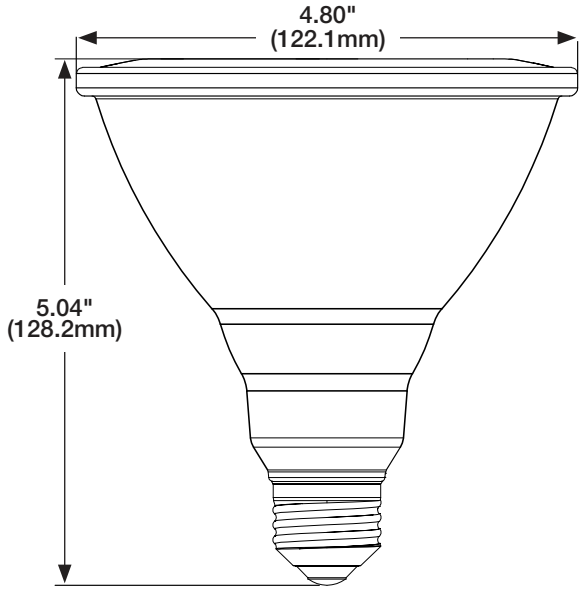

PAR 38

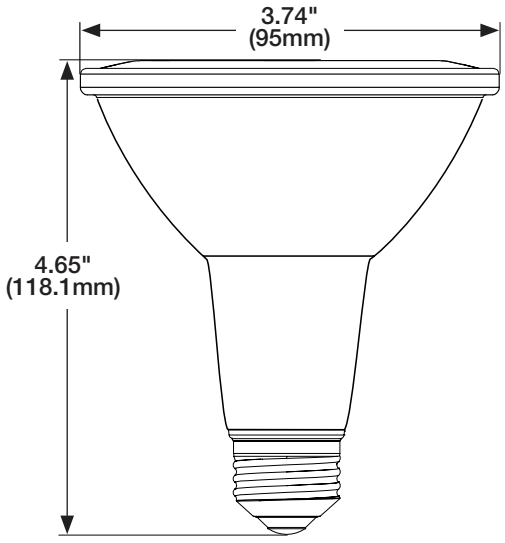

PAR 30/LN

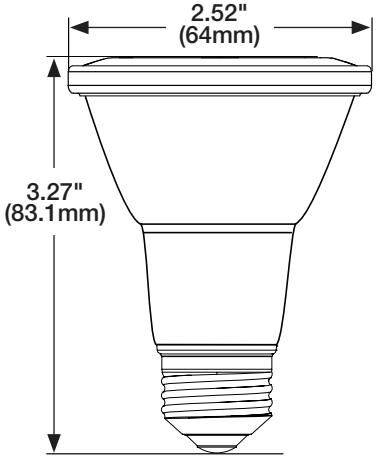

PAR 20

This device complies with Part 15 of the FCC Rules. Operation is subject to the following two conditions: (1) this device may not cause harmful interference, and (2) this device must accept any interference received, including interference that may cause undesired operation.

Specifications are subject to change without prior notice. Replacement wattage shown depends on fixture and application.

WARNING: Some products included in this specification sheet may be subject to the warning requirements of California's Proposition 65. Please refer to your product packaging for more information.

SATCO.COM | 800-437-2826

© Satco Products, Inc. All rights reserved. Rev. 7/24 SA2986