SATCO | NUVO

LED PIR SENSOR LAMPS

INTEGRATED MOTION SENSOR





INSTANT SECURITY LIGHTING SIMPLY PUT INTO EXISTING FIXTURES

INTEGRATED MOTION ACTIVATED SENSOR

SENSOR HAS A 90° VIEWING ANGLE AND A 26′ RANGE

WORKS WITH STANDARD FIXTURES

LIGHT ACTIVATES FOR 5 MINUTES WHEN MOTION IS DETECTED

DUSK-TO-DAWN OPERATION

DUAL MODE CAPABLE WITH MOTION SENSOR OR ALWAYS-ON

SUGGESTED APPLICATIONS
Indoor or Outdoor Applications, Including Walkways, Entryways and Garages

MOTION ACTIVATED FOR CONVENIENCE & SAFETY

SATCO|NUVO's PIR screw-base lamps with integrated motion sensor turn any luminaire into a motion activated light source without added wiring. Conveniently install lamps to improve safety and security in any application. Available in A19 and PAR38 bulb shapes and rated for wet locations, these lamps can be used indoors or outdoors, and are ideal for walkways, entryways, and garages.

90 CRI | WET LOCATION | TRUSTED NB WARRANTY | 3 Year Warranty

GENERAL SPECIFICATIONS

Input Voltage, Frequency: 120V/60Hz
Sensor Type: Passive Infrared Sensor (PIR)
Detection Area: 90°
CRI: 90

Functional Life: 15,000 Hours
Color: White
Location Rating: Wet
Ambient Operating Temperature: -4°F (-20°C) to +104°F (+40°C)

ITEM SPECIFICATIONS / ORDER INFO

Item	Shape	Base	Watts	Replacement Wattage	Lumens	CCT	Beam Angle	Efficacy	UPC	Pack Qty
S11443	PAR 38	E26	14W	100W	1,150	3000K	40°	Up to 82 LPW	045923114434	12/6
S11444	PAR 38	E26	14W	100W	1,150	5000K	40°	Up to 82 LPW	045923114441	12/6
S11445	A19	E26	12W	75W	1,050	3000K	230°	Up to 88 LPW	045923114458	24/12
S11446	A19	E26	12W	75W	1,050	5000K	230°	Up to 88 LPW	045923114465	24/12

DIMENSIONS

Item	(A) MOL	(B) MOD	Weight (Lbs)
S11443	5.35"	4.85"	.76
S11444	5.35"	4.85"	.76
S11445	5.11"	2.36"	.27
S11446	5.11"	2.36"	.27

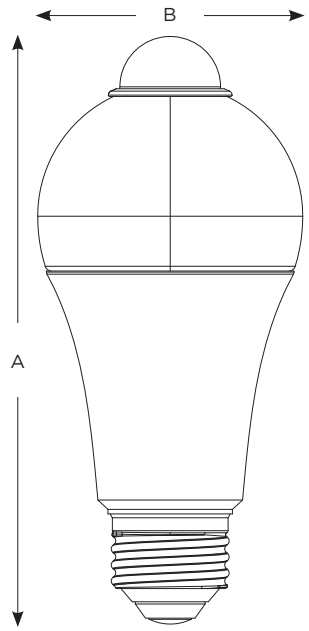

A19

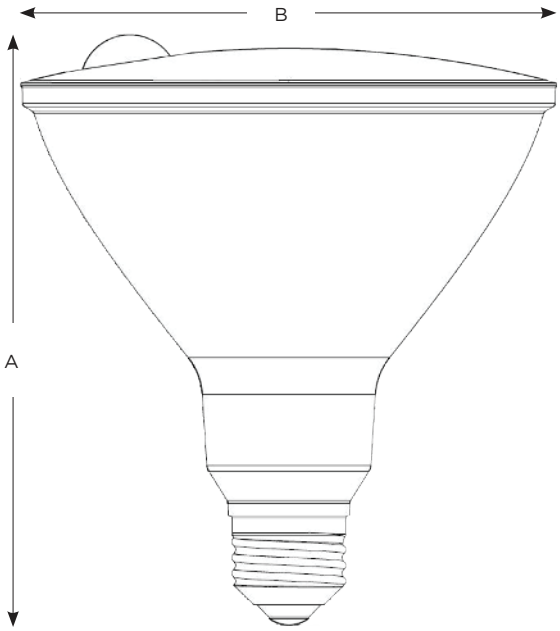

PAR 38

Specifications are subject to change without prior notice. Replacement wattage shown depends on application and fixture. This device complies with Part 15 of the FCC Rules. Operation is subject to the following two conditions: (1) this device may not cause harmful interference, and (2) this device must accept any interference received, including interference that may cause undesired operation.

WARNING: Some products included in this specification sheet may be subject to the warning requirements of California's Proposition 65. Please refer to your product packaging for more information.

© Satco Products, Inc. All rights reserved. Rev. 3/8 SA2963