SATCO | NUVO

LED POST TOP LAMPS

FIELD SELECTABLE | E26 & EX39 BASES





S13148





S13149



Helps control light pollution

WATTAGE & CCT SELECTABLE

CONTROLS LIGHT POLLUTION

DOWNWARD DIRECTIONAL LIGHTING

ENCLOSED FIXTURE RATED

LONG LIFE - 50,000 HOURS

SUGGESTED APPLICATIONS

Parks
Campuses
Gardens
Walkways

Illuminate outdoor spaces using SATCO|NUVO's new LED post top lamps, crafted to enhance visibility while helping to reduce light pollution. Designed with improved light shielding and a downward directional beam, these lamps minimize uplight and eliminate visual distractions above the light source. They offer excellent control of light distribution, making them a responsible choice for parks, campuses, walkways, garden paths, and more. Field-selectable for both wattage and color temperature, each model offers three wattage levels and CCTs of 3000K, 4000K, or 5000K for tailored performance. Built to withstand the elements, these lamps feature a rugged aluminum construction, an IP65 watertight seal cap, and 4kV surge protection. They are enclosed fixture rated for added versatility and backed by a 50,000-hour rated life and 5-year warranty. Designed to perform and to protect the night sky.



SATCO | NUVO

LED POST TOP LAMPS
FIELD SELECTABLE | E26 & EX39 BASES

GENERAL SPECIFICATIONS

Range Voltage: 120V-277V
Frequency: 50/60Hz
Power Factor: >0.9
Dimming: Step dimming through wattage selectable switch
Efficacy: Up to 160 LPW
CRI: 80
CCT Selectable: 3000K/4000K/5000K

Beam Angle: 120°
Location Rating: Wet
Ambient Operating Temperature: -25°C (-13°F) to +50°C (+122°F)
Enclosed Fixture Rating: Yes
Material: Aluminum
Lamp Shape: Corncob
Functional Life: 50,000 Hours
Warranty: 5 Years

ITEM SPECIFICATIONS / ORDER INFO

Item	Lamp Base	Lumen Range	Wattage Selectable	Replacement Wattage	Input Current @120V/277V	DLC ID#
S13148	E26 Medium	5800-6400/4350-4800/2900-3200	40W/30W/20W	150W-175W	0.33-0.14/0.25-0.11/0.17-0.07A	N/A
S13149	EX39 Mogul Extended	8700-9600/6525-7200/5220-5760	60W/45W/36W	200W-250W	0.50-0.22/0.38-0.16/0.30-0.13A	S-2R1YW3

ACCESSORIES (SOLD SEPARATELY)

Item	Description
92-410	Mogul To Medium E39 - E26 Reducer; 660W; 600V
80-929	LED HID Surge Protector; 100-277V AC; 10KV Protection Level

DIMENSIONS

Item	MOL (A)	MOD (B)	Weight
S13148	5.68"	5.69"	1.04 Lbs.
S13149	6.57"	6.63"	1.36 Lbs.

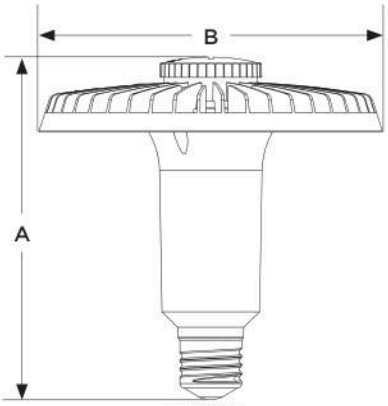

S13148

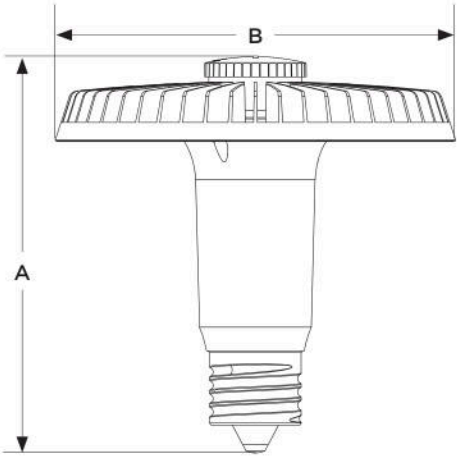

S13149

FEATURES


CCT & Wattage Switches


IP65 Watertight Seal Cap


Durable Aluminum Housing


Downward Directional Light

Specifications are subject to change without prior notice.

Replacement wattage shown depends on application and fixture.

This device complies with Part 15 of the FCC Rules. Operation is subject to the following two conditions: (1) this device may not cause harmful interference, and (2) this device must accept any interference received, including interference that may cause undesired operation. Fixture may not be compatible with all dimmers.

Warning: This product can expose you to chemicals including lead, which is known to the a State of California to cause cancer and birth defects or other reproductive harm. For more information go to www.P65Warnings.ca.gov.

Meets requirements of ICES-005 issue 5 class A for use in commercial applications.

Visit satco.com/service/warranty for complete warranty details.

SATCO.COM | 800-437-2826

© Satco Products, Inc. All rights reserved. 08/25 SN1888