TOUCH-SELECT SLIMFIT DOWNLIGHTS

PLUS SERIES | FLAT LENS | REMOTE DRIVER







Press Lens to
Select Color Temperature

6" Round



4" Round

SELECT COLOR TEMPERATURE BY PRESSING THE LENS

SLIMFIT DESIGN NO HOUSING REQUIRED

4" & 6" SIZES AVAILABLE

110° BEAM ANGLE

SUGGESTED APPLICATIONS

Multi-Family
Residential
Education
Hospitality

SATCO Touch-Select LED Slimfit Downlights feature innovative technology that allows users to select color temperature by simply pushing the lens. Five color temperatures are available ranging from warm white to natural light. Touch-Select Slimfit downlights offer a 110° beam angle and 90+ CRI for high-quality illumination suitable for a range of applications. These downlights are available in 4" and 6" housing sizes and are rated for use in bathrooms and closets. A remote driver with quick connect allows for easy installation in tight spaces - no housing required.

90+ CRI | CCT SELECTABLE | 120 VOLT | CLOSET RATED | DIMMABLE | WET LOCATION | IC RATED | AIR TIGHT | NO HOUSING REQUIRED | 50,000 HOURS | 5 YEAR WARRANTY

TOUCH-SELECT SLIMFIT DOWNLIGHTS
PLUS SERIES | FLAT LENS | REMOTE DRIVER

GENERAL SPECIFICATIONS

Input Voltage: 120V
Frequency: 60Hz
Power Factor: >0.9
THD: >20%
Dimmable: Phase-Cut Dimmable Down to 10%
CRI: 90+
CCT Selectable: 2700/3000/3500/4000/5000K
Beam Angle: 110°
Location Rating: Wet

Ambient Operating Temperature: -4°F to +104°F (-20°C to +40°C)
Finish: White
Suitable for Bathroom Application: Yes
IC Rated: Yes
AT Rated: Yes
Construction: Iron and Polycarbonate
Functional Life: 50,000 Hours
Warranty: 5 Year

ITEM SPECIFICATIONS / ORDER INFO

Item	Model	Size	Shape	Wattage	Max Lumens	Efficacy	Replacement Wattage	Input Current @120V	Case QTY
S12910	DLS9WL4R/9TSCCT5/WHF/D120	4"	Round	9W	750	83 LPW	45W	0.10A	12
S12911	DLS13WL6R/9TSCCT5/WHF/D120	6"	Round	13W	1100	85 LPW	60W	0.13A	12

NOMENCLATURE

DLS9WL4R/9TSCCT5/WHF/D120
1 2 3 4 5 6 7 8 9 10 11

1-Downlight Slimfit
2-Wattage
3-LED
4-Size & Shape
5-CRI (90+)
6-Touch Select
7-5 CCT Selectable
8-Finish
9-Flat Lens
10-Dimmable
11-Voltage

DIMENSIONS / WEIGHTS

Item	Diameter (A)	Height (B)	Weight
S12910	4.74"	1.33"	0.68 Lbs.
S12911	6.79"	1.64"	0.93 Lbs.

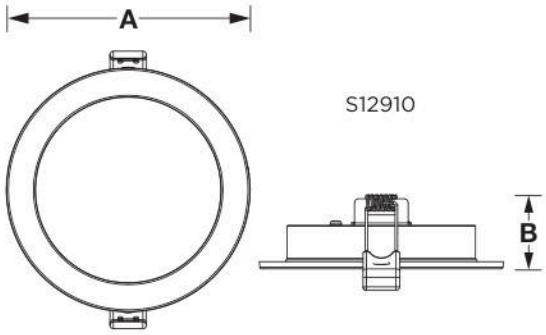

S12910

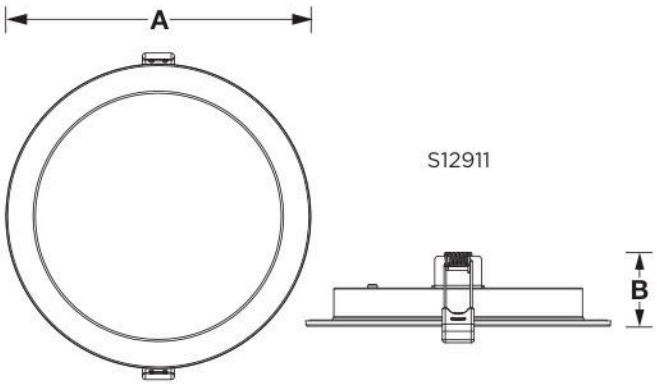

S12911

FEATURES


Press Lens to Select Color Temperature


Ideal for Tight Spaces


Adjustable Spring Clips

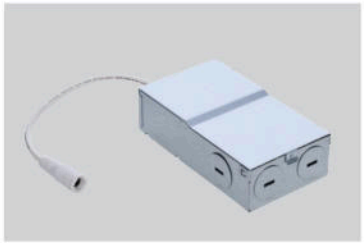
Remote Driver with Quick Connect

© Satco Products, Inc. All rights reserved. 9/26 SN2165

OPTIONAL ACCESSORIES

Item	FOR USE WITH S12910	
80-865	4" ASYMMETRIC MOUNTING PLATE FOR NEW CONSTRUCTION	
80-943	4" MOUNTING PLATE WITH HANGER BARS FOR NEW CONSTRUCTION	
80-950	4" MOUNTING PLATE FOR STUD/JOIST MOUNTING FOR NEW CONSTRUCTION	

Item	FOR USE WITH S12911	
80-866	6" ASYMMETRIC MOUNTING PLATE FOR NEW CONSTRUCTION	
80-944	6" MOUNTING PLATE WITH HANGER BARS FOR NEW CONSTRUCTION	
80-952	6" MOUNTING PLATE FOR STUD/JOIST MOUNTING FOR NEW CONSTRUCTION	

Item	FOR USE WITH S12910 & S12911	
80-997	HANGER BAR KIT FOR USE WITH 80-865 AND 80-866	
80-867	UNIVERSAL MOUNTING PLATE FOR NEW CONSTRUCTION	
S8000	5 WATT LED EMERGENCY DRIVER; 120-277 VOLTS	
S8002	10 WATT LED EMERGENCY DRIVER; 120-277 VOLTS	
80-973	EMERGENCY DRIVER ENCLOSURE; FOR USE WITH S8000 AND S8002	
80-987	EM REMOTE TEST SWITCH; SINGLE GANG PLATE; WHITE FINISH	
80-949	6' REMOTE DRIVER 3-PIN EXT	

This device complies with Part 15 of the FCC Rules. Operation is subject to the following two conditions: (1) this device may not cause harmful interference, and (2) this device must accept any interference received, including interference that may cause undesired operation.

Fixture may not be compatible with all dimmers. See satco.com for details.

Specifications are subject to change without prior notice.

Replacement wattage shown depends on application and fixture.

Meets requirements of ICES-005 issue 5 class B for use in residential and commercial applications.

WARNING: This product can expose you to chemicals including Lead which is known to the State of California to cause cancer, or birth defects, or other reproductive harm. For more information, go to http://www.P65Warnings.ca.gov.

Visit satco.com/service/warranty for complete warranty details.

© Satco Products, Inc. All rights reserved. 9/26 SN2165