SATCO

TOUCH-SELECT RETROFIT DOWNLIGHTS

PLUS SERIES | ROUND | BAFFLE TRIM







Press Lens to
Select Color Temperature



6" Round



4" Round

SELECT COLOR TEMPERATURE BY PRESSING THE LENS

EASILY RETROFITS USING EXISTING HOUSINGS

4" AND 6" SIZES AVAILABLE

110° BEAM ANGLE

SUGGESTED APPLICATIONS

Multi-Family
Residential
Education
Hospitality
Shower Safe

SATCO Touch-Select LED Retrofit Downlights feature innovative technology that allows users to select color temperature by simply pushing the lens. Five color temperatures are available ranging from warm white to natural light. Touch-Select Retrofit downlights offer a 110° beam angle with 90+ CRI for high-quality illumination. Both 4" and 6" sizes are available, making these downlights suitable for a range of applications. Touch-Select Retrofit downlights can easily be installed into existing housings by using the included E26 socket



TOUCH-SELECT RETROFIT DOWNLIGHTS
PLUS SERIES | ROUND | BAFFLE TRIM

GENERAL SPECIFICATIONS

Input Voltage: 120V
Frequency: 60Hz
Power Factor: >0.9
Adapter Base Included: E26 Base Included
Dimmable: Phase-Cut Dimmable Down to 10%
CRI: 90+
CCT Selectable: 2700/3000/3500/4000/5000K
Beam Angle: 110°
Location Rating: Wet

Ambient Operating Temperature: -4°F to +104°F (-20°C to +40°C)
Finish: White
Suitable for Bathroom Application: Yes
IC Rated: Yes
AT Rated: No
Construction: Thermo Plastic (PBT)
Functional Life: 50,000 Hours
Warranty: 5 Year

ITEM SPECIFICATIONS / ORDER INFO

Item	Model	Size	Shape	Wattage	Max Lumens	Efficacy	Replacement Wattage	Input Current @120V	Case QTY
S12900	DLR8WL4R/9TSCCT5/WHB/D120	4"	Round	8W	700	87 LPW	45W	0.09A	12
S12901	DLR10WL6R/9TSCCT5/WHB/D120	6"	Round	10W	900	90 LPW	60W	0.10A	12

NOMENCLATURE

DLR8WL4R/9TSCCT5/WHB/D120
1 2 3 4 5 6 7 8 9 10 11

1-Downlight Retrofit
2-Wattage
3-LED
4-Size & Shape
5-CRI (90+)
6-Touch Select
7-5 CCT Selectable
8-Finish
9-Baffle Trim
10-Dimmable
11-Voltage

DIMENSIONS / WEIGHTS

Item	Diameter (A)	Height (B)	Weight
S12900	5.04"	2.36"	0.24 Lbs.
S12901	7.32"	4.13"	0.40 Lbs.

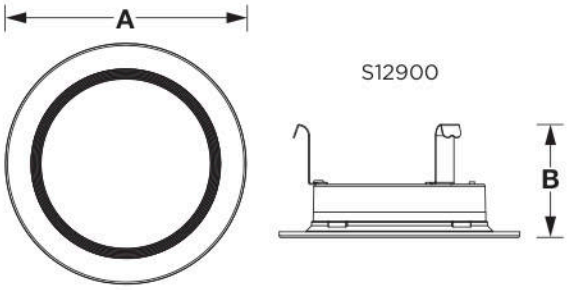

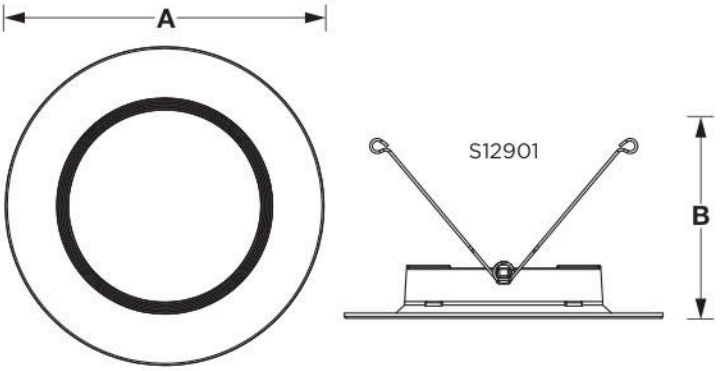

FEATURES


Press Lens to Select Color Temperature


Baffle Trim


E26 Socket Adapter Included


Quick Connect for Easy Installation

© Satco Products, Inc. All rights reserved. 9/26 SN2164

OPTIONAL ACCESSORIES

Item	FOR USE WITH S12900	
80-980	4" NEW CONSTRUCTION CAN	
80-981	4" REMODEL CAN	

Item	FOR USE WITH S12901	
80-982	5" NEW CONSTRUCTION CAN	
80-983	5" REMODEL CAN	
80-988	6" NEW CONSTRUCTION CAN	
80-989	6" REMODEL CAN	
S12621	FRICTION BAND FOR 5-6" DOWNLIGHT RETROFIT	

Item	FOR USE WITH S12900 & S12901	
80-868	QUICK CONNECT TO E26 SOCKET WHIP	
S8999	GU24 SOCKET ADAPTER	
S9000	GU10 SOCKET ADAPTER	

This device complies with Part 15 of the FCC Rules. Operation is subject to the following two conditions: (1) this device may not cause harmful interference, and (2) this device must accept any interference received, including interference that may cause undesired operation.

Fixture may not be compatible with all dimmers. See satco.com for details.

Specifications are subject to change without prior notice.

Replacement wattage shown depends on application and fixture.

Meets requirements of ICES-005 issue 5 class B for use in residential and commercial applications.

WARNING: This product can expose you to chemicals including Lead which is known to the State of California to cause cancer, or birth defects, or other reproductive harm. For more information, go to http://www.P65Warnings.ca.gov.

Visit satco.com/service/warranty for complete warranty details.

© Satco Products, Inc. All rights reserved. 9/26 SN2164