LED LOW PROFILE DOWNLIGHTS

PERFORMER SERIES | REMOTE DRIVER
SMOOTH REGRESS





6" Round

4" Round

CANLESS DIRECT WIRE INSTALLATION — NO HOUSING REQUIRED

OFFERED IN 4 OR 6 INCH ROUND SIZES

NON-CONDUCTIVE DEAD FRONT TRIM

REMOTE DRIVER J-BOX

5 CCT SELECTABLE

LOW PROFILE DESIGN FOR COMPACT SPACES

SUGGESTED APPLICATIONS

Residential
Multi-Family
Showers
Bathrooms
Kitchens
Closets
Laundry Rooms

SATCO's Performer Series LED Low Profile Downlights bring clean, modern style and versatile illumination to any space. Their sleek, low-profile design blends seamlessly into ceilings, creating a polished look without taking up unnecessary space. With five selectable color temperatures ranging from warm 2700K to crisp 5000K, it's easy to create the perfect ambiance for everything from cozy living spaces to bright work areas. High 90+ CRI delivers vibrant, true-to-life color, while the diffused lens provides comfortable, even illumination. The canless, direct-wire design simplifies installation by eliminating the need for a separate housing, making these downlights an ideal choice for both new construction and renovation projects. A non-conductive trim makes them a smart choice for showers and bathrooms, while dimmable performance makes it easy to set the right mood wherever they're installed.



LED LOW PROFILE DOWNLIGHTS
PERFORMER SERIES | REMOTE DRIVER | SMOOTH REGRESS

GENERAL SPECIFICATIONS

Input Voltage: 120V
Frequency: 60Hz
Power Factor: >0.9
THD: <20%
Dimmable: Phase-Cut Dimmable Down to 10%
CRI: 90+
CCT Selectable: 2700K/3000K/3500K/4000K/5000K
Beam Angle: 80°
Location Rating: Wet
Ambient Operating Temperature: -4°F to +104°F (-20°C to +40°C)

Suitable for Bathroom Applications: Yes
IC Rated: Yes
AT Rated: Yes
Material: Plastic
Finish: White
Shape: Round
Lens Finish/Material: Matte Frosted/Polycarbonate
Functional Life: 50,000 Hours
Warranty: 5 Year

ITEM SPECIFICATIONS / ORDER INFO

Item	Product Code	Size	Max Lumens	Wattage	Replacement Wattage	Input Current @120V	Efficacy	Case Qty
S12606	DLLP6WL4R/9CCT5/WHS/D120	4"	600	6W	45W	0.07A	Up to 100 LPW	12
S12607	DLLP7WL6R/9CCT5/WHS/D120	6"	900	7W	70W	0.08A	Up to 128 LPW	12

NOMENCLATURE

DLLP6WL4R/9CCT5/WHS/D120
1 2 3 4 5 6 7 8 9 10

1-Downlight Low Profile
2-Wattage
3-LED
4-Size & Shape
5-CRI (90+)
6-5 CCT Selectable
7-Finish
8-Lens Type (Smooth Regressed)
9-Dimmable
10-Voltage

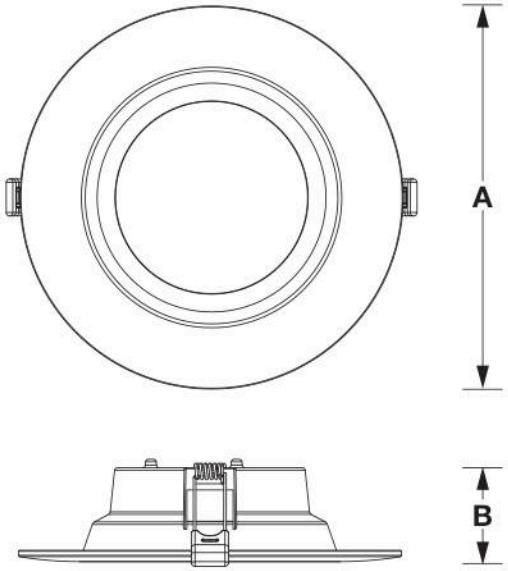

DIMENSIONS / WEIGHTS

Item	Diameter (A)	Height (B)	Weight
S12606	5.31"	1.65"	0.62 Lbs.
S12607	7.36"	2.01"	0.72 Lbs.

FEATURES



5 CCT Selectable Switch


Remote Driver J-Box


Integrated Quick-Connect Cable


Smooth Regress Plastic Trim

This device complies with Part 15 of the FCC Rules. Operation is subject to the following two conditions: (1) this device may not cause harmful interference, and (2) this device must accept any interference received, including interference that may cause undesired operation.
Fixture may not be compatible with all dimmers. See satco.com for details.
Specifications are subject to change without prior notice.
Replacement wattage shown depends on application and fixture.
Meets requirements of ICES-005 issue 5 class B for use in residential and commercial applications.
WARNING: This product can expose you to chemicals including Lead which is known to the State of California to cause cancer, or birth defects, or other reproductive harm. For more information, go to http://www.P65Warnings.ca.gov.
Visit satco.com/service/warranty for complete warranty details.

SATCO.COM | 800-437-2826

© Satco Products, Inc. All rights reserved. 11/26 SN2155

PHOTOMETRICS

SATCO Item: S12606

Description: DLLP6WL4R/9CCT5/WHS/D120
Default Power Setting: 6W
Default CCT Setting: 2700K
639 LM, 5.31 W, 120 LPW
Beam Angle: 94°
Field Angle: 137°
Spacing Criteria (0°-180°): 1.17
Spacing Criteria (90°-270°): 1.18

Candela Polar Plot

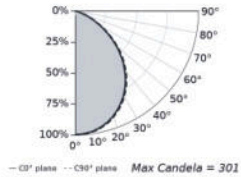

Zonal Lumens

Zone	Lumens	%Luminaire
0-30°	226	35.4%
0-40°	360	56.3%
0-60°	574	89.9%
0-90°	639	100.0%
90-180°	0	0.0%
0-180°	639	100.0%

Illumination at Distance

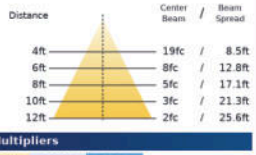

Lumen Multipliers

2700K	3000K	3500K	4000K	5000K
1.00	1.02	1.04	1.04	1.02

SATCO Item: S12607

Description: DLLP7WL6R/9CCT5/WHS/D120
Default Power Setting: 7W
Default CCT Setting: 2700K
917 LM, 6.86 W, 134 LPW
Beam Angle: 94°
Field Angle: 136°
Spacing Criteria (0°-180°): 1.17
Spacing Criteria (90°-270°): 1.17

Candela Polar Plot

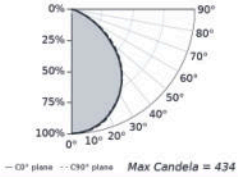

Zonal Lumens

Zone	Lumens	%Luminaire
0-30°	325	35.4%
0-40°	518	56.5%
0-60°	827	90.2%
0-90°	917	100.0%
90-180°	0	0.0%
0-180°	917	100.0%

Illumination at Distance

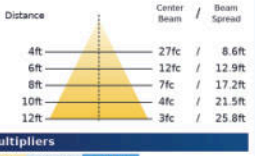

Lumen Multipliers

2700K	3000K	3500K	4000K	5000K
1.00	1.03	1.05	1.06	1.03

OPTIONAL ACCESSORIES

Item	FOR USE WITH S12606	
80-865	4" ASYMMETRIC MOUNTING PLATE FOR NEW CONSTRUCTION	
80-943	4" MOUNTING PLATE WITH HANGER BARS FOR NEW CONSTRUCTION	
80-950	4" MOUNTING PLATE FOR STUD/JOIST MOUNTING FOR NEW CONSTRUCTION	

Item	FOR USE WITH S12607	
80-866	6" ASYMMETRIC MOUNTING PLATE FOR NEW CONSTRUCTION	
80-944	6" MOUNTING PLATE WITH HANGER BARS FOR NEW CONSTRUCTION	
80-952	6" MOUNTING PLATE FOR STUD/JOIST MOUNTING FOR NEW CONSTRUCTION	

Item	FOR USE WITH S12606 & S12607	
80-997	HANGER BAR KIT FOR USE WITH 80-865 AND 80-866	
80-867	UNIVERSAL MOUNTING PLATE FOR NEW CONSTRUCTION	
S8000	5 WATT LED EMERGENCY DRIVER; 120-277 VOLTS	
S8002	10 WATT LED EMERGENCY DRIVER; 120-277 VOLTS	
80-973	EMERGENCY DRIVER ENCLOSURE; FOR USE WITH S8000 AND S8002	
80-987	EM REMOTE TEST SWITCH; SINGLE GANG PLATE; WHITE FINISH	
80-985	6' REMOTE DRIVER 3-PIN EXT	

© Satco Products, Inc. All rights reserved. 11/26 SN2155