SATCO | NUVO

TRACK HEAD LIGHTING

J & H STYLE | DIM TO WARM | ROUND & SQUARE







J-Style



H-Style

ColorQuick®
Selectable Color Technology
Warm — Cool

5 CCT SELECTABLE & DIM TO WARM

90 CRI HIGH QUALITY LIGHT

J-TRACK & H-TRACK COMPATIBLE MODELS

AVAILABLE IN ROUND OR SQUARE FOR A VARIETY OF APPLICATIONS

SUGGESTED APPLICATIONS

Restaurants
Hospitality
Commercial
Residential
Retail
Accent Lighting

SATCO|NUVO LED Track Heads combine refined design with outstanding versatility for contemporary spaces. These sleek, low-profile fixtures feature 5 CCT selectability (2700K–5000K) plus Dim to Warm technology (3000K–2000K), delivering adaptable color tuning with the warm, inviting glow of incandescent light as they dim. Available in H-style and J-style configurations, with round or square housings and finishes in white, black, or brushed nickel, they offer 36° and 48° beam angles for tailored illumination. An adjustable head allows precise horizontal and vertical aiming, while the prismatic lens enhances beam quality. Ideal for restaurants, hospitality, offices, kitchens, retail, and more.

DIM-TO-WARM | 90 CRI | 36° BEAM | 48° BEAM | 50,000 HOURS | 3 YEAR WARRANTY

SATCO | NUVO

TRACK HEAD LIGHTING

J & H STYLE | DIM TO WARM | ROUND & SQUARE

GENERAL SPECIFICATIONS

Input Voltage: 120V
Wattage: 8W
Replacement Wattage: 40W
Max Lumens: 600
Input Current: 0.07A
Frequency: 60Hz
Power Factor: >0.92
Efficacy: up to 75 LPW
CRI: 90+

CCT Selectable: 2700K/3000K/3500K/4000K/5000K
Dim to Warm: 3000K-2000K
Dimmable: Phase-Cut dimmable down to 10%
Location Rating: Dry
Ambient Operating Temperature: -20°C (-4°F) to +40°C (+104°F)
Construction: Aluminum
Lens Material: Polycarbonate (PC)
Functional Life: 50,000 Hours
Warranty: 3 Years

ITEM SPECIFICATIONS

Item Number	Shape	Finish	Beam Angle
	J-STYLE		
JH5051	Square	White	36°
JH5052	Square	Black	36°
JH5053	Square	Brushed Nickel	36°
JH5054	Square	White	48°
JH5055	Square	Black	48°
JH5056	Square	Brushed Nickel	48°
JH5061	Round	White	36°
JH5062	Round	Black	36°
JH5063	Round	Brushed Nickel	36°
JH5064	Round	White	48°
JH5065	Round	Black	48°
JH5066	Round	Brushed Nickel	48°
	H-STYLE		
TH751	Square	White	36°
TH752	Square	Black	36°
TH753	Square	Brushed Nickel	36°
TH754	Square	White	48°
TH755	Square	Black	48°
TH756	Square	Brushed Nickel	48°
TH761	Round	White	36°
TH762	Round	Black	36°
TH763	Round	Brushed Nickel	36°
TH764	Round	White	48°
TH765	Round	Black	48°
TH766	Round	Brushed Nickel	48°

This device complies with Part 15 of the FCC Rules. Operation is subject to the following two conditions: (1) this device may not cause harmful interference, and (2) this device must accept any interference received, including interference that may cause undesired operation.

WARNING: Some products included in this specification sheet may be subject to the warning requirements of California's Proposition 65. Please refer to your product packaging for more information.

Meets requirements of ICES-005 issue 5 class B for use in residential applications.

Fixture may not be compatible with all dimmers.

Replacement wattage shown depends on application and fixture.

Specifications are subject to change without prior notice.

Visit satco.com/service/warranty for complete warranty details.

© Satco Products, Inc. All rights reserved. 01/26 SN1923

DIMENSIONS/WEIGHTS

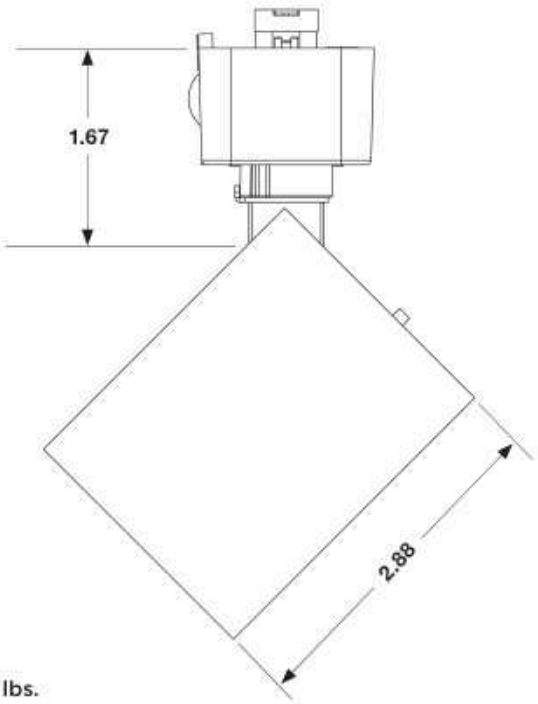

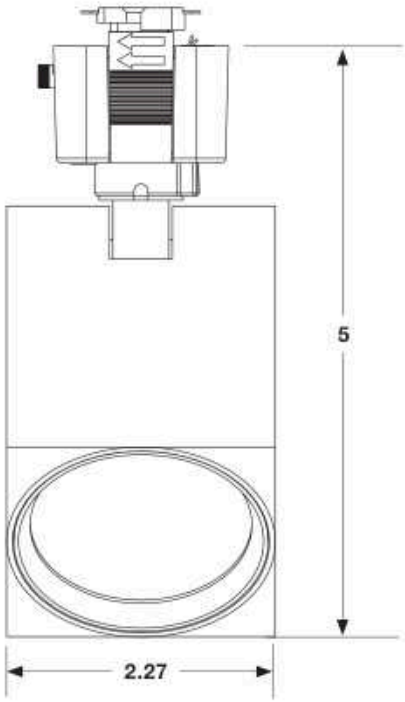

J-Style Square 0.82 lbs.

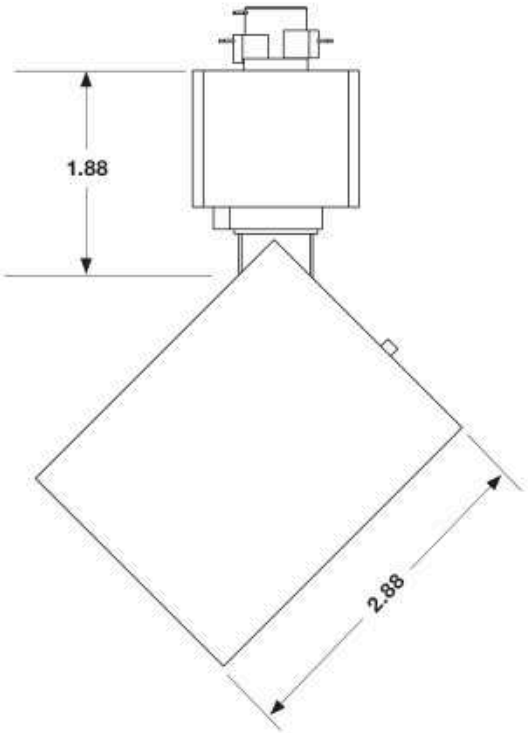

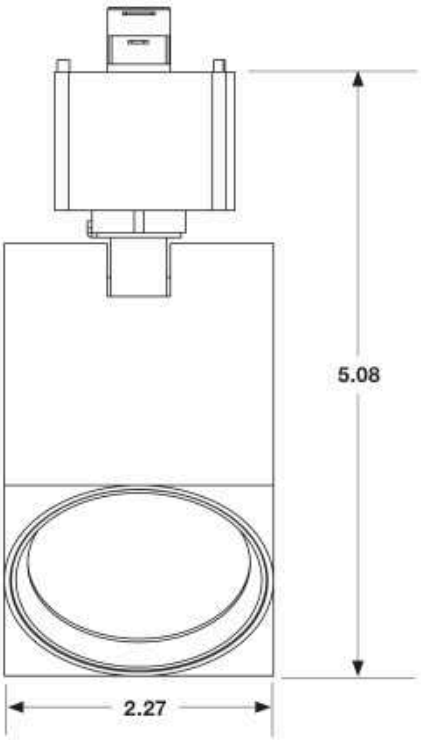

H-Style Square 0.82 lbs.

© Satco Products, Inc. All rights reserved. 01/26 SN1923

DIMENSIONS/WEIGHTS

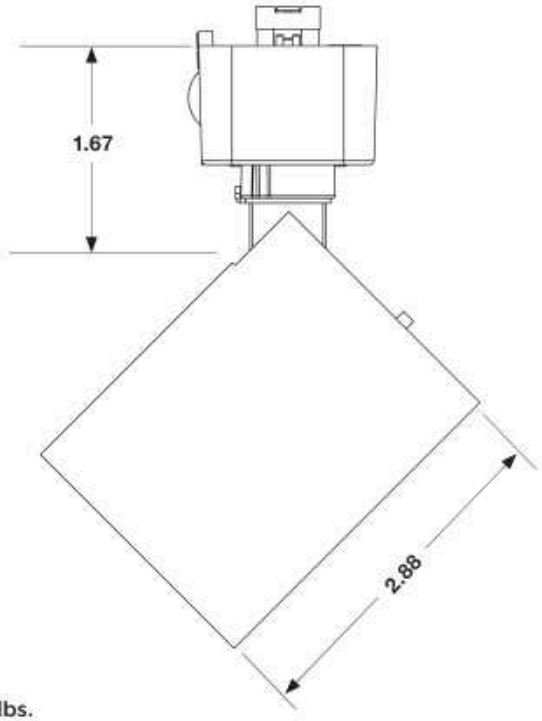

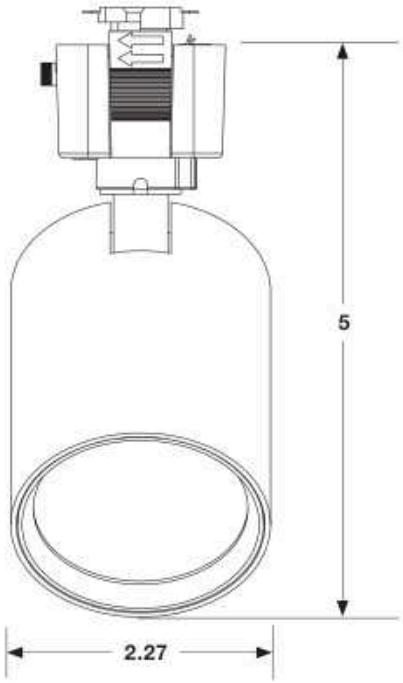

J-Style Round 0.51 lbs.

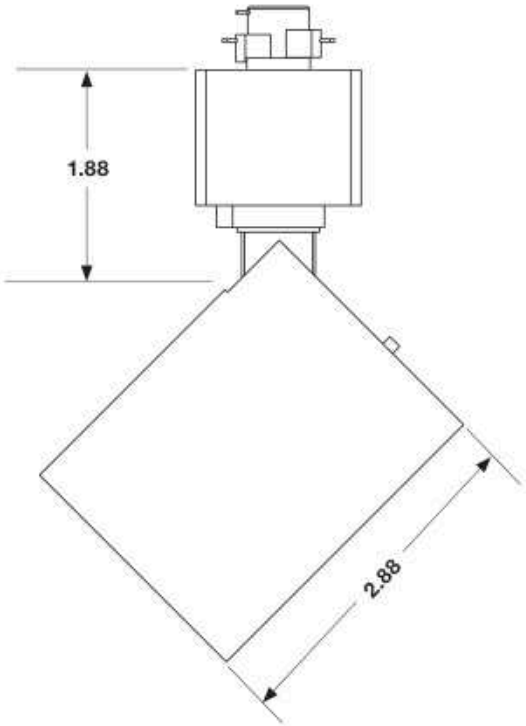

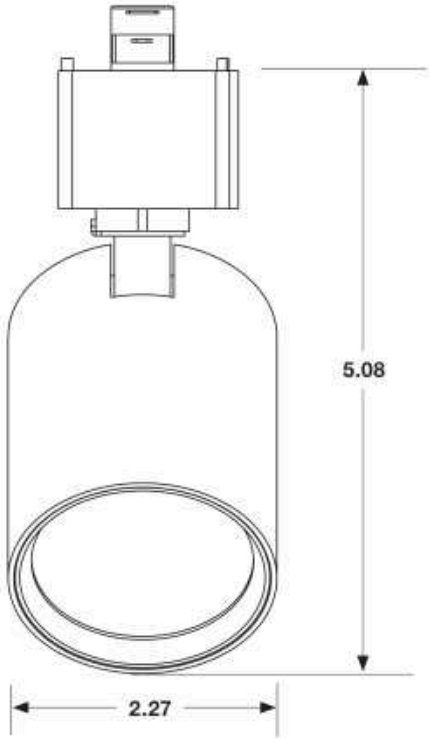

H-Style Round 0.51 lbs.

© Satco Products, Inc. All rights reserved. 01/26 SN1923

AIMING GUIDE

L and **W** are the outer points where the candle power drops to 50% of the maximum.
LX and **FC** are center beam illuminance values. Data shown is for the 2700K setting.

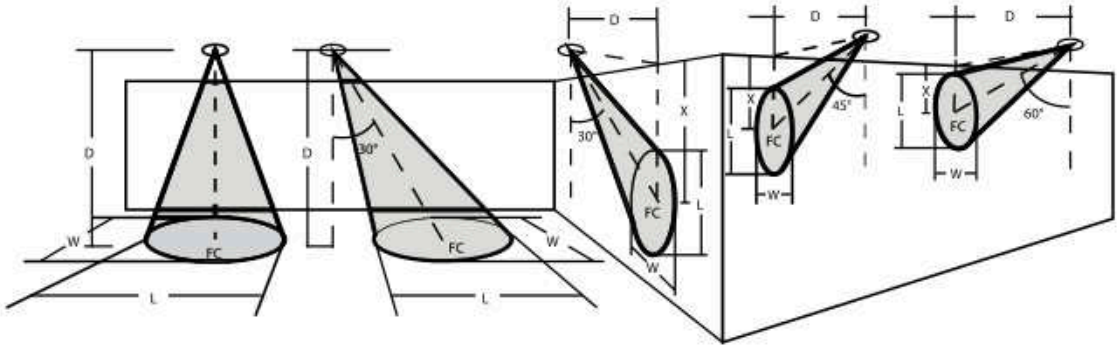

Horizontal Aiming Angles

0°

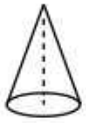

36° Models

D	(ft)	LX	FC	L	W
6	6.00	339.36	31.53	3.39	3.39
8	8.00	190.89	17.73	4.52	4.52
10	10.00	122.17	11.35	5.65	5.65
12	12.00	84.84	7.88	6.78	6.78
14	14.00	62.33	5.79	7.91	7.91

48° Models

D	(ft)	LX	FC	L	W
6	6	203.74	18.93	5.44	5.44
8	8	114.6	10.65	7.25	7.25
10	10	73.35	6.81	9.07	9.07
12	12	51	4.74	10.88	10.88
14	14	37.42	3.48	12.69	12.69

30°



36° Models

D	(ft)	LX	FC	L	W
6	6.93	254.57	23.65	4.52	3.96
8	9.24	143.2	13.3	6.03	5.27
10	11.55	91.64	8.51	7.53	6.59
12	13.86	63.64	5.91	9.04	7.91
14	16.17	46.74	4.34	10.55	9.23

48° Models

D	(ft)	LX	FC	L	W
6	6.93	152.83	14.2	7.79	6.51
8	9.24	85.97	7.99	10.39	8.68
10	11.55	55.02	5.11	12.99	10.85
12	13.86	38.21	3.55	15.58	13.02
14	16.17	28.06	2.61	18.18	15.20

Vertical Aiming Angles

30°



36° Models

D	(ft)	LX	FC	L	W
3	6.00	339.36	31.53	8.98	3.64
4	8.00	190.89	17.73	11.97	4.86
5	10.00	122.17	11.35	14.97	6.07
6	12.00	84.84	7.88	17.96	7.28
7	14.00	62.33	5.79	20.96	8.50

48° Models

D	(ft)	LX	FC	L	W
3	6	203.74	18.93	28.45	8.80
4	8	114.6	10.65	37.93	11.73
5	10	73.35	6.81	47.41	14.67
6	12	51	4.74	56.90	17.60
7	14	37.42	3.48	66.38	20.53

45°

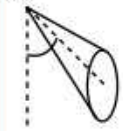

36° Models

D	(ft)	LX	FC	L	W
3	4.24	678.75	63.06	3.69	2.50
4	5.66	381.79	35.47	4.76	3.34
5	7.07	244.34	22.7	6.15	4.17
6	8.49	169.68	15.76	7.38	5.01
7	9.90	124.66	11.58	8.61	5.84

48° Models

D	(ft)	LX	FC	L	W
3	4.24	407.49	37.86	6.85	4.32
4	5.66	229.21	21.3	9.14	5.76
5	7.07	146.69	13.63	11.42	7.20
6	8.49	101.87	9.46	13.71	8.64
7	9.90	74.84	6.95	15.99	10.08

60°

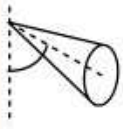

36° Models

D	(ft)	LX	FC	L	W
3	3.46	1018.11	94.6	2.33	1.99
4	4.62	572.67	53.2	3.10	2.65
5	5.77	366.5	34.05	3.88	3.31
6	6.93	254.53	23.65	4.65	3.97
7	8.08	187	17.37	5.43	4.64

48° Models

D	(ft)	LX	FC	L	W
3	3.46	611.21	56.78	3.90	3.26
4	4.62	344.06	31.96	5.19	4.34
5	5.77	220.03	20.44	6.49	5.43
6	6.93	152.8	14.19	7.79	6.51
7	8.08	112.26	10.43	9.09	7.60

© Satco Products, Inc. All rights reserved. 01/26 SN1923

TRACK ACCESSORIES

Item#	Description	Finish	Length	Width	Height	Cert.
TR118	2 Foot Track, 2 dead end caps, all mounting hardware	White	24"	1 5/16"	5/8"	Dry
TR119	2 Foot Track, 2 dead end caps, all mounting hardware	Black	24"	1 5/16"	5/8"	Dry
TR120	4 Foot Track, 2 dead end caps, all mounting hardware	White	48"	1 5/16"	5/8"	Dry
TR121	4 Foot Track, 2 dead end caps, all mounting hardware	Black	48"	1 5/16"	5/8"	Dry
TR122	8 Foot Track, 2 dead end caps, all mounting hardware	White	96"	1 5/16"	5/8"	Dry
TR123	8 Foot Track, 2 dead end caps, all mounting hardware	Black	96"	1 5/16"	5/8"	Dry
TR124	6 Foot Track, 2 dead end caps, all mounting hardware	White	72"	1 5/16"	5/8"	Dry
TR125	6 Foot Track, 2 dead end caps, all mounting hardware	Black	72"	1 5/16"	5/8"	Dry
TR126	2 Foot Track, 2 dead end caps, all mounting hardware	Brushed Nickel	24"	1 5/16"	5/8"	Dry
TR127	4 Foot Track, 2 dead end caps, all mounting hardware	Brushed Nickel	48"	1 5/16"	5/8"	Dry
TR128	6 Foot Track, 2 dead end caps, all mounting hardware	Brushed Nickel	72"	1 5/16"	5/8"	Dry
TR129	8 Foot Track, 2 dead end caps, all mounting hardware	Brushed Nickel	96"	1 5/16"	5/8"	Dry
TR131	2 Foot Track, 2 dead end caps, all mounting hardware	Russet Bronze	24"	1 5/16"	5/8"	Dry
TR132	4 Foot Track, 2 dead end caps, all mounting hardware	Russet Bronze	48"	1 5/16"	5/8"	Dry
TR133	6 Foot Track, 2 dead end caps, all mounting hardware	Russet Bronze	72"	1 5/16"	5/8"	Dry
TR134	8 Foot Track, 2 dead end caps, all mounting hardware	Russet Bronze	96"	1 5/16"	5/8"	Dry
TP185	Drop Ceiling T-Bar Clips, for attaching Track Lighting to Drop Ceilings; 4 pc.	Metal Plain	1 ½"	½"	¾"	Dry

Tracks Includes two dead end caps and all mounting hardware.



White



Black



Brushed Nickel



Russet Bronze



Used with 3 Conductor "H" type connector



Track with end cap removed

CURRENT LIMITERS

Item	Amp	Finish
TL100	.5	White
TL101	1	White
TL102	2	White
TL103	3	White
TL104	5	White
TL105	8	White
TL106	12	White

Item	Amp	Finish
TL110	.5	Black
TL111	1	Black
TL112	2	Black
TL113	3	Black
TL114	5	Black
TL115	8	Black
TL116	12	Black

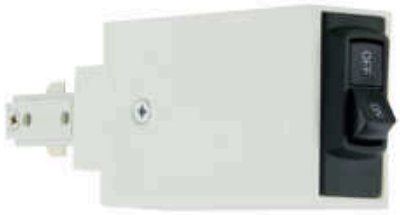

Extensions Lowers Track Heads to desired height

Item	Description	Size	Finish
TP159	Extension	18"	White
TP160	Extension	24"	White
TP161	Extension	36"	White
TP162	Extension	48"	White
TP163	Extension	18"	Black
TP164	Extension	24"	Black
TP165	Extension	36"	Black
TP166	Extension	48"	Black



24" Pendant Suspension Kit
Kit Includes: canopy, stem, support and power feed

ACCESSORIES
TP178 White
TP179 Black



TP159 18" Extension
Shown with PAR38 track head and 120V monopoint adapter

© Satco Products, Inc. All rights reserved. 01/26 SN1923

TRACK ACCESSORIES

PENDANT TRACK ADAPTERS SUPPORTS UP TO 10 LBS.



LOOP ADAPTER

Item	Finish
TP215	White
TP216	Black
TP217	Brown



TRACK ADAPTER

Item	Finish
TP231	White
TP232	Black
TP233	Brown



STEM-HUNG ADAPTER

Item	Finish
TP244	White
TP245	Black
TP246	Brown

MONOPOINT ADAPTERS



LOW VOLTAGE (12V)

Item	Finish
TP176	White
TP177	Black

CORD KIT



LINE VOLTAGE (120V)

Item	Finish
TP156	White
TP157	Black
TP201	Brown

CANOPIES & LIVE ENDS PROVIDING ELECTRICITY TO TRACKS IN VARIOUS FORMATS



FLOATING

Item	Finish
TP154	White
TP155	Black
TP202	Brown



CONDUIT LIVE END

Item	Finish
TP169	White
TP170	Black
TP203	Brown
TP269	White REV. POL.
TP270	Black REV. POL



LIVE END & CANOPY

Item	Finish
TP152	White
TP153	Black
TP204	Brown

CONNECTORS CONNECTING TRACKS IN VARIOUS FORMATS | FITS "H" TYPE TRACK



STRAIGHT

Item	Finish
TP144	White
TP145	Black
TP205	Brown



"L" CONNECTOR (90° angles)

Item	Finish
TP146	White
TP147	Black
TP208	Brown
TP234	White REV. POL.
TP235	Black REV. POL
TP236	Brown REV. POL



"T" CONNECTOR

Item	Finish
TP148	White
TP149	Black
TP207	Brown
TP237	Black REV. POL.
TP238	White REV. POL
TP239	Brown REV. POL



"X" CONNECTOR

Item	Finish
TP150	White
TP151	Black
TP206	Brown

DROP CEILING T-BAR TRACK CLIPS



TP185

(4 pieces per package • 90-018 nut not included)

© Satco Products, Inc. All rights reserved. 01/26 SN1923

TRACK ACCESSORIES

Item	Description	Finish	Length	Width	Height	Cert.
TP240	Track Suspension Aircraft Cable; White Canopy	White	144"	-	-	Dry
TP241	Track Suspension Aircraft Cable; Black Canopy	Black	144"	-	-	Dry
TP242	Track Suspension Aircraft Cable; Brushed Nickel Canopy	Brushed Nickel	144"	-	-	Dry
TP247	Single Monopoint Adapter; Round; Black Finish	Black	4 ¾"	4 ¾"	1"	Dry
TP248	Single Monopoint Adapter; Round; White Finish	White	4 ¾"	4 ¾"	1"	Dry
TP249	Triple Monopoint Adapter; Round; Black Finish	Black	4 ¾"	4 ¾"	1"	Dry
TP250	Triple Monopoint Adapter; Round; White Finish	White	4 ¾"	4 ¾"	1"	Dry
TP251	Double Monopoint Adapter; Rectangular; Black Finish	Black	9 ¼"	4 ⅝"	1"	Dry
TP252	Double Monopoint Adapter; Rectangular; White Finish	White	9 ¼"	4 ⅝"	1"	Dry
TP253	Triple Monopoint Adapter; Rectangular; Black Finish	Black	14 ¾"	4 ⅝"	1"	Dry
TP254	Triple Monopoint Adapter; Rectangular; White Finish	White	14 ¾"	4 ⅝"	1"	Dry
TP255	Outlet Track Adapter; Black Finish	Black	1 7/16"	1 7/16"	2 ⅝"	Dry
TP256	Outlet Track Adapter; White Finish	White	1 7/16"	1 7/16"	2 ⅝"	Dry
TP257	Outlet Track Adapter; Brown Finish	Brown	1 7/16"	1 7/16"	2 ⅝"	Dry
TP258	Sloped Ceiling Track Adapter; Black Finish	Black	1 ⅜"	1 7/16"	4 ¾"	Dry
TP259	Sloped Ceiling Track Adapter; White Finish	White	1 ⅜"	1 7/16"	4 ¾"	Dry
TP260	Sloped Ceiling Track Adapter; Brown Finish	Brown	1 ⅜"	1 7/16"	4 ¾"	Dry
TP278	Adjustable Track Pendant Kit; White Canopy	White	4 ¾"	4 ¾"	40"	Dry
TP279	Adjustable Track Pendant Kit; Black Canopy	Black	4 ¾"	4 ¾"	40"	Dry
TP280	Adjustable Track Pendant Kit; Brushed Nickel	Brushed Nickel	4 ¾"	4 ¾"	40"	Dry

TRACK SUSPENSION AIRCRAFT CABLES & KITS



TP240



TP241



TP242



TP278



TP279



TP280

© Satco Products, Inc. All rights reserved. 01/26 SN1923

SINGLE MONOPOINT ADAPTERS | ROUND FITS "H" TYPE TRACK



TP247



TP248



TP249



TP250

DOUBLE MONOPOINT ADAPTERS | RECTANGULAR FITS "H" TYPE TRACK



TP252



TP251

TRIPLE MONOPOINT ADAPTERS | RECTANGULAR



TP254



TP253

OUTLET TRACK ADAPTERS



TP255



TP256



TP257

SLOPED CEILING TRACK ADAPTERS



TP258



TP259



TP260

© Satco Products, Inc. All rights reserved. 01/26 SN1923