SATCO|NUVO

LED EMERGENCY LIGHTS

CHICAGO APPROVED





TWO OR THREE ADJUSTABLE LED LAMP HEADS

WALL MOUNTING, ACCESSORIES INCLUDED

STEEL HOUSING CONSTRUCTION

90-MINUTE BATTERY BACKUP RUNTIME

TEST SWITCH AND AC SUPPLY INDICATOR

SUGGESTED APPLICATIONS
Commercial & Industrial, Garages, Retail, Schools, Hospitals

Provide dependable emergency illumination with SATCO|NUVO's Chicago Approved LED Emergency Lights. Built with a durable steel housing and adjustable LED lamp heads, these fixtures deliver light where it is needed most during power outages. All models are UL 924 certified, rated for damp locations, and feature a 90-minute emergency battery backup, push-to-test button, and AC power indicator for easy maintenance and system monitoring. The remote-capable model supports compatible remote lamp heads for expanded emergency lighting coverage when required, making it ideal for larger spaces or extended egress paths.

120-277V | DAMP LOCATION | 90 MIN RUNTIME | 2 YEAR WARRANTY

GENERAL SPECIFICATIONS

Input Voltage: 120V-277V
Frequency: 50/60Hz
Power Factor: >0.4
THD: <130%
Emergency Backup: Yes
Emergency Duration / Run Time: 90 Minutes
Recharge Time: 24 Hours
Battery Push to Test Button: Yes

Battery Type: LiFePO4
Housing Construction / Finish: Steel / Gloss White
Lens Material / Finish: Acrylic / Frosted
Mounting Options: Wall
Location Rating: Damp
Ambient Operating Temperature: +41°F to +113°F (+5°C to +45°C)
Warranty: 2 Year

ITEM SPECIFICATIONS / ORDER INFO

Item	Product Code	Wattage	CCT	Input Current @120V/277V	Lumens	Number of Lamp Heads	Remote Capable
67-380	EL/WH/U/BB2H/CH	4W	5700K	0.03-0.01A	800L	2	No
67-381	EL/WH/U/BB2HRC/CH	4.5W	5700K	0.04-0.02A	800L	2	Yes
67-382	EL/WH/U/BB3H/CH	4.5W	5700K	0.04-0.02A	1200L	3	No

DIMENSIONS / WEIGHTS

Item	Width	Height	Depth	Weight
67-380	12.00"	9.00"	2.42"	3.31 Lbs.
67-381	12.00"	9.00"	2.42"	3.31 Lbs.
67-382	12.00"	9.00"	2.42"	4.00 Lbs.

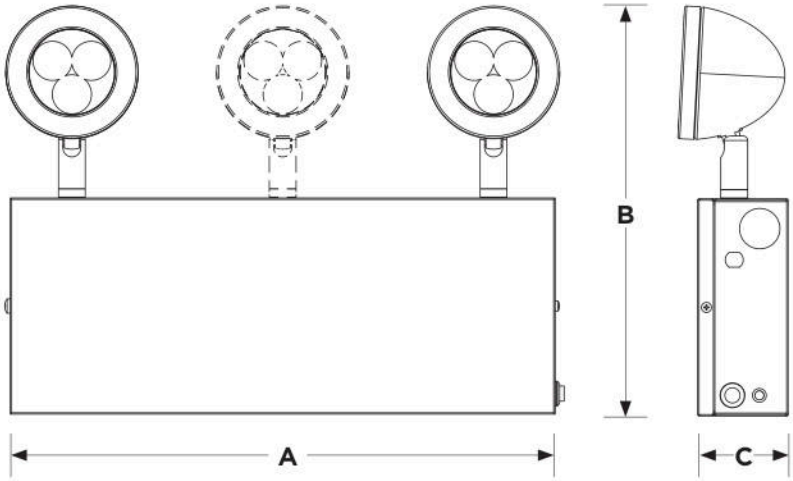

NOMENCLATURE

EL/WH/U/BBXXYY/CH
1 2 3 4 5 6 7

1-Product Family (EL=Emergency Light)
2-Housing Color (WH = White)
3-Input Voltage (U=120-277V)
4-Battery Backup
5-Number of Lighting Heads (2H=Two Heads, 3H=Three Heads)
6-Remote Capable (Blank=No support, RC=Remote Capable)
7-City of Code (CH=Chicago)

FEATURES


Steel Housing



Test Switch & Power Supply Indicator


Adjustable LED Light Heads

© Satco Products, Inc. All rights reserved. Rev. 8/26 SN2107

OPTIONAL ACCESSORIES

Item	Compatible with 67-381	
67-395	Remote Emergency Light; Chicago Approved; White Housing; Single Head; 6 Vdc 1.5 W	
67-396	Remote Emergency Light; Chicago Approved; White Housing; Dual Head; 6 Vdc 3.0 W	

This device complies with Part 15 of the FCC Rules. Operation is subject to the following two conditions: (1) this device may not cause harmful interference, and (2) this device must accept any interference received, including interference that may cause undesired operation.

Warning: This product can expose you to chemicals including lead, which is known to the State of California to cause cancer and birth defects or other reproductive harm. For more information go to www.P65Warnings.ca.gov

Meets requirements of ICES-005 issue 5 class B for use in residential and commercial applications.

Specifications are subject to change without prior notice.

Visit satco.com/service/warranty for complete warranty details.

© Satco Products, Inc. All rights reserved. Rev. 8/26 SN2107