SATCO | NUVO

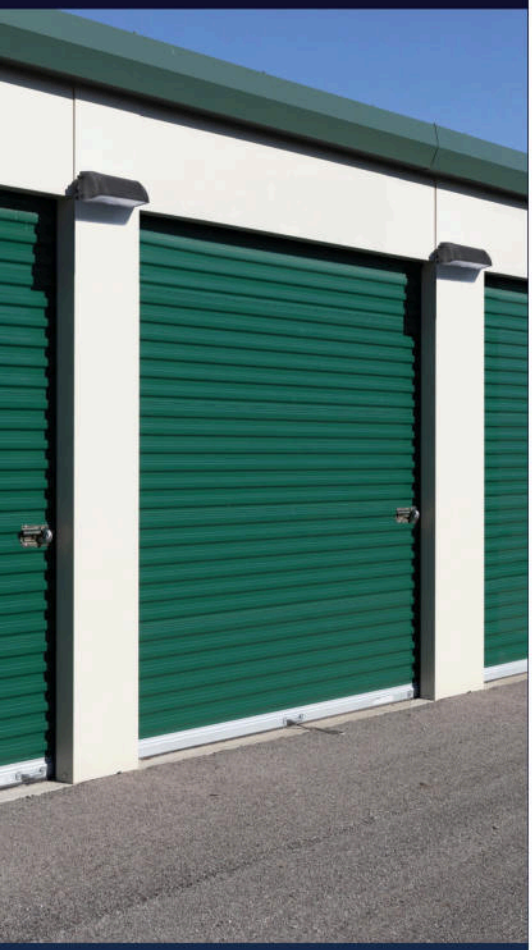

LED FULL CUTOFF WALL PACK

FIELD SELECTABLE





FIELD SELECTABLE: WATTAGE AND CCT

RANGE VOLTAGE 120V-277V

INTEGRATED BYPASSABLE PHOTOCELL

SUGGESTED APPLICATIONS

Walkways
Warehouses
Office Buildings
Schools
Hospitality

Deliver reliable, energy-efficient outdoor lighting with this LED Full Cutoff Wall Pack, designed for versatility and long-term performance. Featuring field-selectable technology, it allows you to choose from three wattages and three color temperatures at installation—providing the flexibility to tailor light output and ambiance to any application. An integrated bypassable photocell offers convenient dusk-to-dawn operation, while compatibility with select dimmers enables additional control and energy savings. Constructed from durable die-cast aluminum with a corrosion-resistant bronze finish and paired with an impact-resistant polycarbonate lens, this fixture is built to withstand demanding environments. Ideal for walkways, warehouses, office buildings, schools, and other commercial settings, it delivers dependable illumination with a clean, full cutoff design that minimizes glare and light trespass.



LED FULL CUTOFF WALL PACK
FIELD SELECTABLE

GENERAL SPECIFICATIONS

Input Voltage: 120V-277V
Frequency: 50/60Hz
Power Factor: >0.9
THD: 8.97%
Dimmable: 0-10V Dimmable Down to 20%
Surge Protection Rating: 4kV
Integrated Photocell: Bypassable
Efficacy: up to 163 LPW
CRI: 80+
CCT Selectable: 3000K/4000K/5000K

Location Rating: Wet
IP Rating: IP65
IK Rating: IK08
Ambient Operating Temperature: -40°C (-40°F) to +40°C (+104°F)
Mounting Options: Wall
Construction: Die-Cast Aluminum
Finish: Bronze
Lens: Impact Resistant Polycarbonate
Functional Life: 50,000 Hours
Warranty: 5 Years

ITEM SPECIFICATIONS / ORDER INFO

Item	Max Lumens	Wattage Selectable	HID Replacement Wattage	Input Current @120V/277V	Beam Spread	DLC ID
65-941	11904	80W/60W/45W	100W-250W	0.38-0.16/0.50-0.22/0.67-0.29A	90°x100°	S-DBDWXC

DIMENSIONS / WEIGHTS

Item	Width (A)	Height (B)	Extends (C)	Weight
65-941	12.61"	6.86"	5.17"	5.73 Lbs.

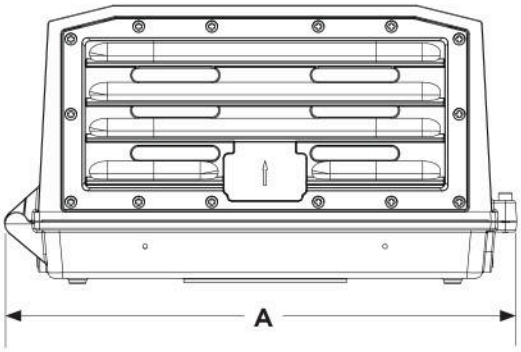

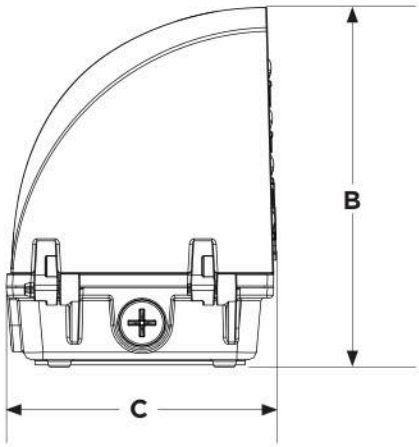

FEATURES

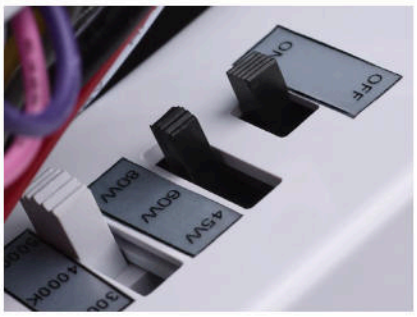

CCT Selectable Switch
Wattage Selectable Switch
Photocell On/Off Switch



Integrated Bypassable Photocell



IK08 Impact Resistant Lens

This device complies with Part 15 of the FCC Rules. Operation is subject to the following two conditions: (1) this device may not cause harmful interference, and (2) this device must accept any interference received, including interference that may cause undesired operation.

WARNING: Some products included in this specification sheet may be subject to the warning requirements of California's Proposition 65. Please refer to your product packaging for more information.

Meets requirements of ICES-005 issue 5 class A for commercial applications.

See satco.com for a list of compatible dimmers.

Replacement wattage shown depends on application and fixture.

Specifications are subject to change without prior notice.

Visit satco.com/service/warranty for complete warranty details.

SATCO.COM | 800-437-2826

© Satco Products, Inc. All rights reserved. 03/26 SN1955