SATCO | NUVO

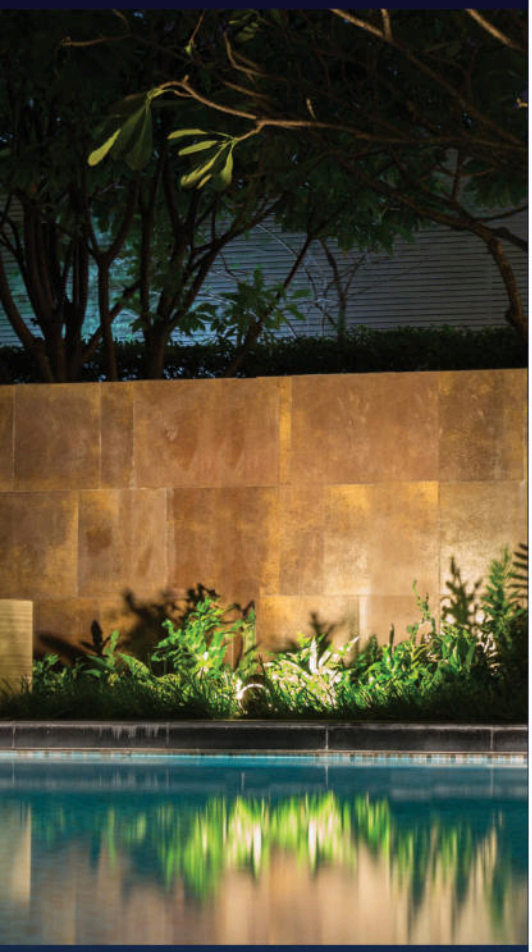

LED FLOOD LIGHTS

PERFORMER SERIES | WIDE BEAM SPREAD | TEMPERED GLASS



All Models Include
Separate Mounting Plate

6Vx6H NEMA DISTRIBUTION

DIE-CAST ALUMINUM HOUSING WITH TEMPERED GLASS LENS

INTEGRATED HEAT SINK FOR THERMAL MANAGEMENT

CONTEMPORARY DESIGN

SUGGESTED APPLICATIONS

Building Facades
Landscape Lighting
Security and Perimeter Lighting
Residential Buildings
Signs and Billboards
Wall Wash

The SATCO|NUVO LED Performer Flood Light series delivers reliable, high-output illumination for outdoor area and site lighting applications in a cost-effective design. Constructed with a durable die-cast aluminum housing and a tempered glass lens, these fixtures are built to perform in demanding environments and are wet location rated with an IP65 classification. A wide 120° beam angle and NEMA 6Vx6H distribution provide broad, even light coverage. Offered in multiple wattage and lumen packages, these flood lights achieve up to 115 lumens per watt for efficient operation. Available CCT options include 4000K and 5000K to suit a range of exterior lighting needs. Additional features include an IK06 impact rating and a bronze finish. With a 30,000-hour rated life and a 3-year warranty, this series offers dependable performance and long-term value.

120 VOLT | WET LOCATION | IP 65 | IK 06 | 30,000 HOURS | 3 YEAR WARRANTY | TRUSTED NLB WARRANTY

SATCO | NUVO

LED FLOODLIGHTS

PERFORMER SERIES | WIDE BEAM SPREAD | TEMPERED GLASS

GENERAL SPECIFICATIONS

Input Voltage: 120V
Frequency: 50/60Hz
Power Factor: >0.94
THD: <30%
Dimmable: Non-Dimmable
Surge Protection Rating: 2kV
CRI: 80
Beam Angle: 120°
NEMA Distribution: 6Vx6H (120°x120°)
Bug Rating: B1-U2-G1

Location Rating: Wet
IP Rating: IP65
IK Rating: IK06
Ambient Operating Temperature: -30°C (-22F) to +45°C (+113°F)
Construction: Die-Cast Aluminum
Lens Material: Tempered Glass
Finish: Bronze
Functional Life: 30,000 Hours
Warranty: 3 Years

ITEM SPECIFICATIONS / ORDER INFO

Item	Lumens	Wattage	Replacement Wattage	Input Current	CCT	Efficacy
65-725	1695	15W	75W	0.130A	4000K	up to 113 LPW
65-726	1725	15W	75W	0.130A	5000K	up to 115 LPW
65-727	3390	30W	200W	0.250A	4000K	up to 113 LPW
65-728	3450	30W	200W	0.250A	5000K	up to 115 LPW
65-729	5650	50W	250W	0.420A	4000K	up to 113 LPW
65-730	5750	50W	250W	0.420A	5000K	up to 115 LPW
65-731	9040	80W	325W	0.670A	4000K	up to 113 LPW
65-732	9200	80W	325W	0.670A	5000K	up to 115 LPW

DIMENSIONS / WEIGHTS

Item	Length (A)	Width (B)	Overall Height (C)	Lamp Height (D)	Weight
65-725	1.89"	5.97"	7.40"	3.94"	1.23 Lbs.
65-726	1.89"	5.97"	7.40"	3.94"	1.23 Lbs.
65-727	1.89"	5.97"	7.40"	3.94"	1.23 Lbs.
65-728	1.89"	5.97"	7.40"	3.94"	1.23 Lbs.
65-729	1.89"	7.15"	8.19"	4.72"	1.47 Lbs.
65-730	1.89"	7.15"	8.19"	4.72"	1.47 Lbs.
65-731	1.89"	8.33"	9.17"	5.71"	1.91 Lbs.
65-732	1.89"	8.33"	9.17"	5.71"	1.91 Lbs.

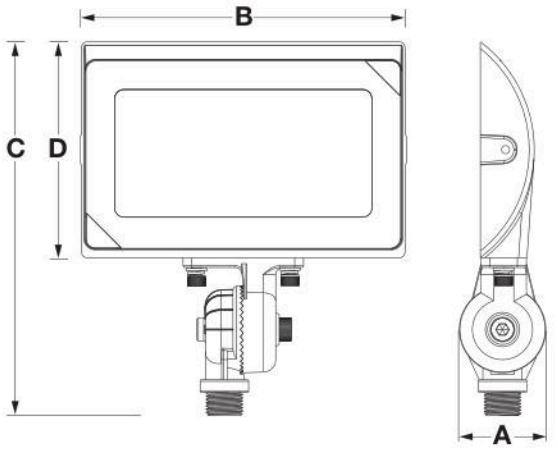

FEATURES


IK06 Impact Resistant Lens


Die-Cast Aluminum Housing


Integrated Heat Sink for Thermal Management


1/2" Knuckle Mount

© Satco Products, Inc. All rights reserved. 9/26 SN1950

OPTIONAL ACCESSORIES

Item	FOR USE WITH 65-725 THROUGH 65-728	
65-737	YOKE MOUNT FOR 15-30W DOB TEMPERED GLASS FLOOD LIGHT; BRONZE FINISH	

Item	FOR USE WITH 65-729 & 65-730	
65-738	YOKE MOUNT FOR 50W DOB TEMPERED GLASS FLOOD LIGHT; BRONZE FINISH	

Item	FOR USE WITH 65-731 & 65-732	
65-739	YOKE MOUNT FOR 80W DOB TEMPERED GLASS FLOOD LIGHT; BRONZE FINISH	

Item	FOR USE WITH ALL SKUS 65-725 THROUGH 65-732	
65-740	TRUNNION MOUNT FOR 15-80W DOB TEMPERED GLASS FLOOD LIGHT; BRONZE FINISH	

Specifications are subject to change without prior notice.
This device complies with Part 15 of the FCC Rules. Operation is subject to the following two conditions: (1) this device may not cause harmful interference, and (2) this device must accept any interference received, including interference that may cause undesired operation.
Meets requirements of ICES-005 issue 5 class A for use in commercial applications.
WARNING: This product can expose you to chemicals including Lead which is known to the State of California to cause cancer, or birth defects, or other reproductive harm. For more information, go to http://www.P65Warnings.ca.gov.
Visit satco.com/service/warranty for complete warranty details.

© Satco Products, Inc. All rights reserved. 9/26 SN1950