SATCO | NUVO

LED AREA LIGHT

BEAM SELECTABLE | FIELD SELECTABLE





BEAM SELECTABLE: TYPE III/IV/V

DLC PREMIUM LISTED

120-277V & 277-480V VERSIONS

MULTIPLE WATTAGE PACKAGES AVAILABLE

3 CCT SELECTABLE: 3000K/4000K/5000K

INTEGRATED SENSOR PORT

SUGGESTED APPLICATIONS
Parking Lots, Parks, Warehouses, Commercial, Arenas, Walkways

BEAM SELECTABLE

SATCO|NUVO's LED Beam Selectable Area Lights deliver high-performance outdoor illumination with precision-controlled distribution. Fixtures feature selectable beams of Type III, Type IV, or Type V and 3 selectable CCT (3000K/4000K/5000K) to tailor coverage and color temperature to each application. Two compact models offer selectable wattages of 100W, 120W, or 150W, while larger footprint options provide 200W, 240W, or 300W outputs, producing lumen packages ranging from 15,488 up to 47,341 lumens. Each size is available in 120–277V or 277–480V configurations to support a wide range of site requirements. Constructed of die-cast aluminum with IK08 rated polycarbonate lenses and a bronze finish, all fixtures are IP65 rated, wet location listed, DLC 6.0 Listed, supporting evolving efficiency standards, and include an integrated sensor port. A standard 2-3/8" slip fitter mount is included, with additional mounting options and accessories available separately, and all models are backed by a 50,000 hour rated life.

FIELD SELECT · 120-277V · 277-480V · 0-10V DIMMING · WET LOCATION · IP65 · IK08 · 6KV SURGE PROTECTION · DLC LISTED PREMIUM · 50,000 HOURS · 5 YEAR WARRANTY · TRUSTED WARRANTY

GENERAL SPECIFICATIONS

Frequency: 50/60Hz
Power Factor: >0.9
THD: <20%
Dimming: 0-10V Dimmable
Surge Protection Rating: 6kV
CRI: 80
CCT Selectable: 3000K/4000K/5000K
Beam Selectable: Type III/IV/V
Location Rating : Wet

IP Rating : IP65
IK Rating : IK08
Ambient Operating Temperature: -40°C (-40°F) to +50°C (+122°F)
Housing Material: Die-Cast Aluminum
Lens Material: Polycarbonate (PC)
Finish: Bronze
Functional Life: 50,000 Hours
Warranty: 5 Years

ITEM SPECIFICATIONS / ORDER INFO

Item	Range Voltage	Lumens	Wattage Selectable	Input Current	BUG Rating	Efficacy	DLC ID
65-1525	120V-277V	15536-22951	150W/120W/100W	1.25-0.54/0.83-0.36/0.67-0.29A	B3-U0-G3	up to 155 LPW	S-1Z34M4
65-1526	120V-277V	31048-47341	300W/240W/200W	2.50-1.08/2.00-0.87/1.67-0.72A	B4-U0-G4	up to 157 LPW	S-C2QN48
65-1527	277V-480V	15488-22855	150W/120W/100W	0.54-0.31/0.36-0.21/0.29-0.17A	B3-U0-G3	up to 154 LPW	S-GP0L4W
65-1528	277V-480V	31289-47198	300W/240W/200W	1.08-0.63/0.87-0.50/0.72-0.42A	B4-U0-G4	up to 157 LPW	S-8M9WQ2

OPTIONAL ACCESSORIES (SOLD SEPARATELY)

Item	Description
COMPATIBLE WITH 65-1525 & 65-1527	
65-1530	AREA LIGHT YOKE MOUNT 100-150W
65-1536	CUTOFF SHIELD 100W - 150W
COMPATIBLE WITH 65-1526 & 65-1528	
65-1531	AREA LIGHT YOKE MOUNT 200-300W
65-1537	CUTOFF SHIELD 200W - 300W
COMPATIBLE WITH 65-1525 & 65-1526	
86-240	PHOTOCELL 120-277V NEMA-3
COMPATIBLE WITH 65-1527 & 65-1528	
86-241	PHOTOCELL 277-480V NEMA-3
COMPATIBLE WITH ALL SKUS	
65-1532	AREA LIGHT TRUNNION MOUNT
65-1533	DIRECT ARM MOUNT
65-1534	UNIVERSAL MOUNT
65-1535	FIXED MOUNT BRACKET
65-1538	WALL MOUNT BRACKET
86-237	PROGRAMMING REMOTE
86-238	ADD ON PIR SENSOR/12 METER
86-239	ADD ON MW SENSOR/15 METER


AREA LIGHT YOKE MOUNT


CUTOFF SHIELD


PHOTOCELL 120-277V NEMA-3


PHOTOCELL 277-480V NEMA-3


AREA LIGHT TRUNNION MOUNT


DIRECT ARM MOUNT


UNIVERSAL MOUNT


FIXED MOUNT BRACKET


WALL MOUNT BRACKET


PROGRAMMING REMOTE


ADD ON PIR SENSOR/12 METER


ADD ON MW SENSOR/15 METER

© Satco Products, Inc. All rights reserved. Rev. 1/26 SN1948

DIMENSIONS / WEIGHTS

Item	Length (A)	Width (B)	Height (C)	Weight
65-1525	25.20"	10.60"	3.20"	10.09 lbs
65-1526	29.20"	14.00"	3.20"	13.91 lbs
65-1527	25.20"	10.60"	3.20"	10.09 lbs
65-1528	29.20"	14.00"	3.20"	13.91 lbs

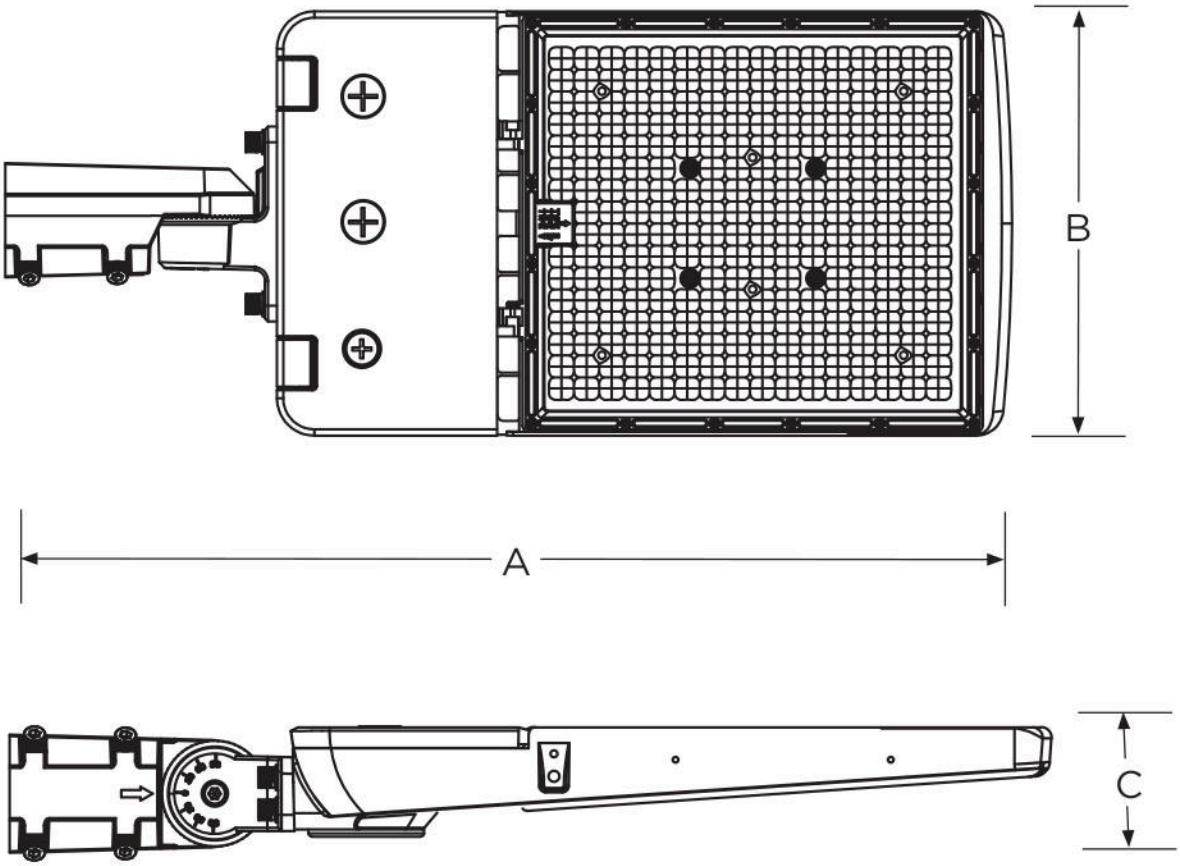

FEATURES



Beam Selectable Switch



CCT & Wattage Switches


IK08 Impact Resistant Lens


NEMA-3 Socket & Shorting Cap


2 3/8" Slip Fitter Mount

This device complies with Part 15 of the FCC Rules. Operation is subject to the following two conditions: (1) this device may not cause harmful interference, and (2) this device must accept any interference received, including interference that may cause undesired operation.

WARNING: Some products included in this specification sheet may be subject to the warning requirements of California's Proposition 65. Please refer to your product packaging for more information.

Meets requirements of ICES-005 issue 5 class A for use in commercial applications.

Fixture may not be compatible with all dimmers. See satco.com for details.

Specifications are subject to change without prior notice.

Photometric reports for all configurations are available at satco.com.

Visit satco.com/service/warranty for complete warranty details

© Satco Products, Inc. All rights reserved. Rev. 1/26 SN1948