SATCO | NUVO

LED WALL PACKS

BEAM SELECTABLE | FIELD SELECTABLE







BEAM SELECTABLE:
60° / 90° / 110°

DLC PREMIUM LISTED

MULTIPLE WATTAGE PACKAGES AVAILABLE

3 SELECTABLE CCT:
3000K/4000K/5000K

INTEGRATED BY-PASSABLE PHOTOCELL

SUGGESTED APPLICATIONS
Commercial, Warehouses, Walkways, Wall Wash, Parking Lots

BEAM SELECTABLE

The SATCO|NUVO LED Wall Packs are designed for precise, high-output perimeter and site lighting in commercial and industrial environments. Beam-selectable optics offer 60°, 90°, or 110° distributions, allowing light to be directed exactly where it's needed for optimal coverage and reduced spill. Selectable wattage from 29W to 120W and selectable CCTs of 3000K, 4000K, and 5000K deliver lumen outputs ranging from 4,225 to 18,221 lumens Built with a durable die-cast aluminum housing, borosilicate glass lens, and an integrated by-passable photocell, these fixtures operate on a universal 120–347V input. IP65 and IK08 rated, wet-location suitable, DLC 6.0 Listed, supporting evolving efficiency standards, and 0–10V dimmable, they offer a 50,000-hour rated life and are backed by a 5-year warranty—ideal for building perimeters, loading areas, and exterior commercial spaces.

FIELD SELECT | 120-347V | 0-10V DIMMING | WET LOCATION | IP 65 | IK 08 | 6KV SURGE PROTECTION | DLC LISTED PREMIUM | 50,000 HOURS | 5 YEAR WARRANTY | TRUSTED NLB WARRANTY

SATCO | NUVO

LED WALL PACKS
BEAM SELECTABLE | FIELD SELECTABLE

GENERAL SPECIFICATIONS

Input Voltage: 120V-347V
Frequency: 50/60Hz
Power Factor: >0.9
THD %: <20%
Dimming: 0-10V Dimmable
Surge Protection Rating: 6kV
CRI: 80
CCT Selectable: 3000K/4000K/5000K
Beam Selectable: 60°/90°/110°

Location Rating : Wet
IP Rating : IP65
IK Rating : IK08
Ambient Operating Temperature: -40°C (-40°F) to +50°C (+122°F)
Housing Material: Die-Cast Aluminum
Lens Material: Borosilicate Glass
Finish: Bronze
Functional Life: 50,000 Hours
Warranty: 5 Years

ITEM SPECIFICATIONS / ORDER INFO

Item	Lumens	Wattage Selectable	Input Current	BUG Rating	Efficacy	DLC ID
65-1500	4225-9193	60W/40W/29W	0.50-0.17/0.33-0.12/0.24-0.11A	B2-U3-G5	up to 153 LPW	S-S5WGVC
65-1501	11858-18221	120W/100W/80W	1.00-0.35/0.83-0.29/0.67-0.23A	B2-U5-G5	up to 151 LPW	S-LRSM9Q

OPTIONAL ACCESSORIES (SOLD SEPARATELY)

Item	Description	Finish	Image
ASSOCIATED WITH BOTH SKUS (65-1500 & 65-1501)			
65-1502	Protective Steel Cage; Silver Finish	Silver	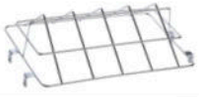
65-1503	Cutoff Shield; Bronze Finish	Bronze	

DIMENSIONS / WEIGHTS

Item	Length (A)	Depth (B)	Height (C)	Weight
65-1500	14.36"	7.45"	9.30"	8.20 lbs
65-1501	14.36"	7.45"	9.30"	8.20 lbs

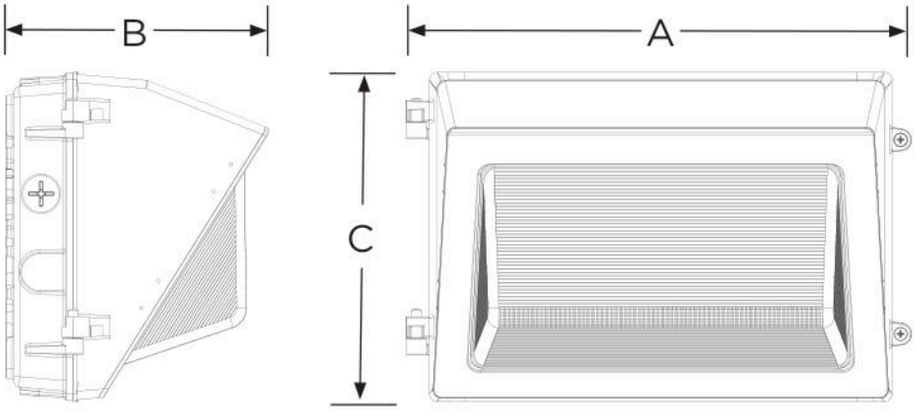

FEATURES


Integrated By-Passable Photocell



Beam, CCT and Wattage Switches


IK08 Vandal Resistant Glass Lens


Integrated Rear-Mounted Level

This device complies with Part 15 of the FCC Rules. Operation is subject to the following two conditions: (1) this device may not cause harmful interference, and (2) this device must accept any interference received, including interference that may cause undesired operation.

WARNING: Some products included in this specification sheet may be subject to the warning requirements of California's Proposition 65. Please refer to your product packaging for more information.

Meets requirements of ICES-005 issue 5 class A for use in commercial applications.

Fixture may not be compatible with all dimmers. See satco.com for details.

Specifications are subject to change without prior notice.

Visit satco.com/service/warranty for complete warranty details.

Photometric reports for all configurations are available at satco.com.

SATCO.COM | 800-437-2826

© Satco Products, Inc. All rights reserved. Rev. 1/26 SN1944