LED LINEAR STRIP LIGHT

J-ST05®

PRODUCT OVERVIEW

4FT Linear Strip Light up to 68W that over 10,000 lumen with DLC Lowbay list to get High rebate



FEATURES AND SPECIFICATIONS

Construction

- 5Wattage and 3 CCT Selectable.
- High lumen efficient 150lm/w on averag.
- Surface-mounting in standard.
- 0-10V dimmable in standard configuration.
- Sensor controls, emergency versions for options.
- Seamless Electronic Link-able available.
- Wiring both on two ends and in the middle available.

Electrical

- Universal voltage 120-277V.

Applications

- Shopping malls and storage facilities, Garage,building stairwells and hallways, Workshop, task or general area lighting.

Listing

- ETL, CETL and DLC listed.

Warranty

- 5 years warranty

Parameter		
Wattage	5 Power Selectable:30W-40W-50W-60W-68W	
Efficacy	>150lm/w	
CCT	3CCT Tunable: 3500K-4000K-5000K	
Input Voltage	120-277Vac; 50/60HZ	
CRI	>80 Ra	
Dimming	0-10V dimming	
Certification	cETLus,DLC Low bay	
Emergency Backup(Optional)	Input voltage	120-277Vac; 50/60HZ
	Output power	8W
	Charge time	>24hrs
	Emergency time	1.5hrs(90min)
	Installation	Field Installation

Construction & Materials		Environmental System	
Diffuser	PC cover	Work Environment	Suitable for dry and damp location
Housing	Powder coating rust against Sheet Metal Board	Operating Temperature	-20℃ to 50℃
Finish	Pure White		

LED LINEAR STRIP LIGHT

Ordering information

Example:MC-ST4F-68MD[B,NJ[A,C]

Brand	ST	4F	68	M	D	Blank	c
JEE Lighting	Linear strip light	4FT	30W-40W -50W- 60W-68W	3500K- 4000K- 5000K	CCT and Wattage Selectable	Motion Sensor &Emergency Backup M: Motion Sensor B: Emergency Backup N: non- montion& emergency	120-277Vac

OTHER OPTIONS FOR INSTALLATION (SEPARATE TO BUY)

IMAGE	MODEL NUMBER	DESCRIPTION
	STPC4	Metal plate connector for a straight line
	STHK	Hanging kit for suspending
	JCOVER	J-BOX Cover

Dimensions

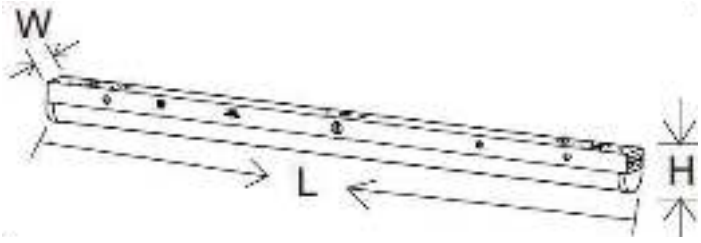

Length	Width	Height
48"	2.95"	3.27"

LED LINEAR STRIP LIGHT

PACKAGING INFORMATION

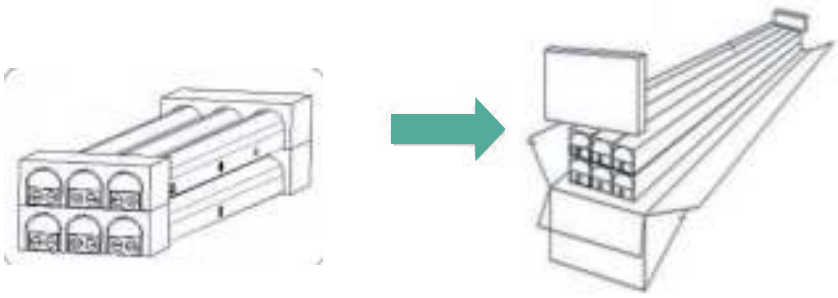

Size	Packing Detail				
	L(cm/inch)	W(cm/inch)	H(cm/inch)	PC/CTN	GW(Kg)
4FT	128.5cm/50.6''	27cm/10.6''	20cm/7.9''	6PC	12.5

INSTALLATION GUIDE

PRODUCT DECRIPTION

- 0-10V Dimming;
- Seamless connection up to 40ft;
- CCT and Wattage Selectable;
- Motion Sensor and Emergency are optional;
- Universal voltage: 120-277V;
- Please comply with the voltage of the lights label indicated

WARNING - RISK OF FIRE OR ELECTRIC SHOCK.PRODUCT MUST BE INSTALLED IN ACCORDANCE WITH THE NATIONAL ELECTRICAL CODE OR YOUR LOCAL ELECTRICAL CODE. IF YOU ARE NOT FAMILIAR WITH THESE CODES AND REQUIREMENTS, CONTACT A QUALIFIED ELECTRICIAN. DANGER – RISK OF SHOCK – DISCONNECT POWER BEFORE INSTALLATION



Picture is for illustration purposes only. Your model may vary.

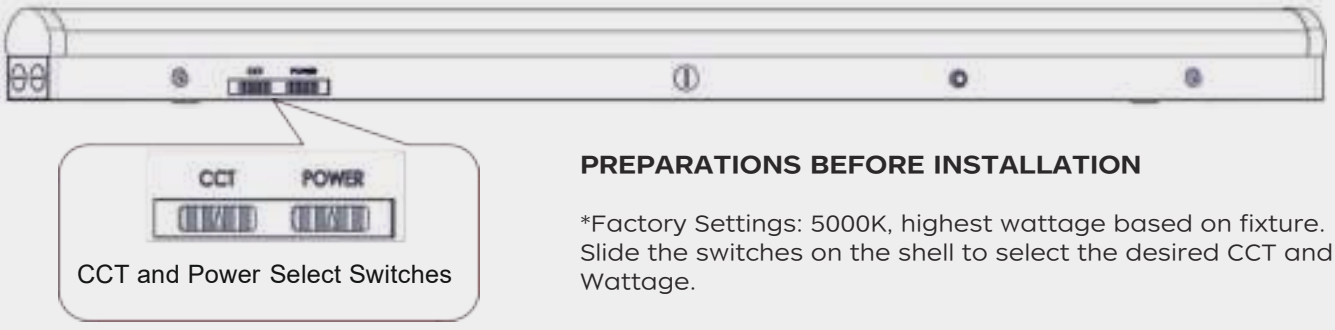

CCT and Power Select Switches

PREPARATIONS BEFORE INSTALLATION

*Factory Settings: 5000K, highest wattage based on fixture. Slide the switches on the shell to select the desired CCT and Wattage.

LED LINEAR STRIP LIGHT

ACCESSORIES

Expansion Rubber Plus		4PCS	Embeded screws ceiling and fixed	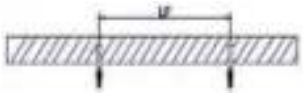
Wiring Nut		5PCS	Connect input wire and AC power and dimming wire	
Screws		4PCS	Fix the matel body on the ceiling	
(Optional,Not Standard) Backplane			J-Box Cover	
(Optional ,Not Standard) Linkable Plate			Put 2fixtures in this plate to make sure they are in a straight line	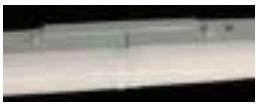
(Optional ,Not Standard) Hanging Ropes			Hanging the light	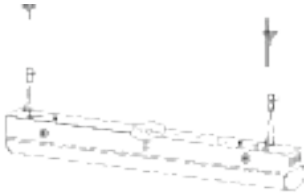

WIRING DIAGRAM (LINKABLE VERSION)

AC Power Input Wiring for the Initial Light

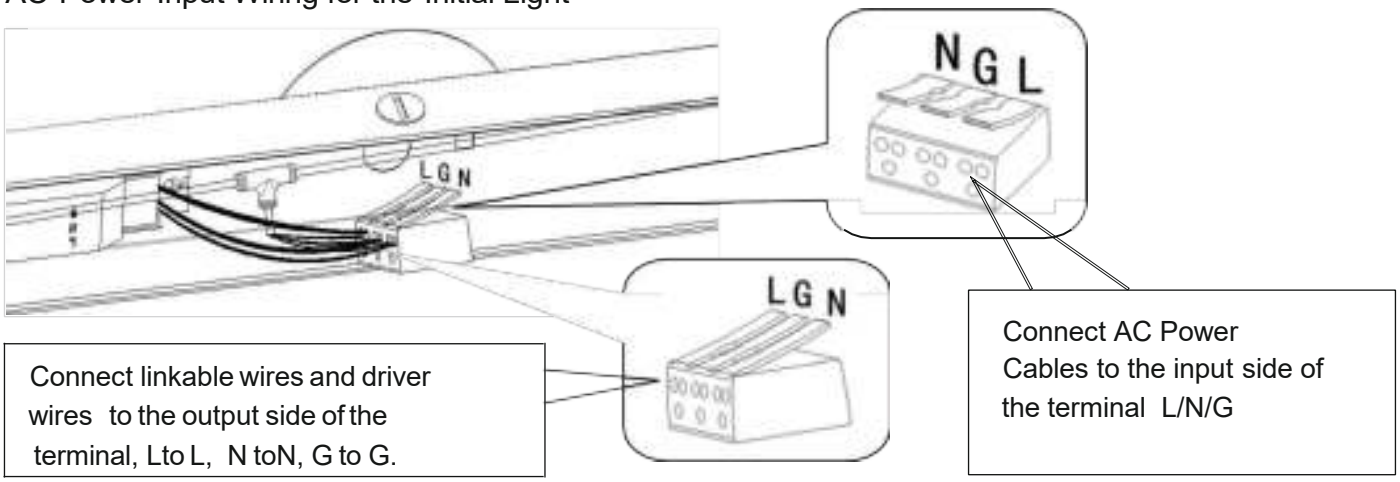

LED LINEAR STRIP LIGHT

4FT-72 Strips Daisy-chain qty

120V INPUT

Wattage	Max. theoretical daisy-chain qty	Conservative rated daisy-chain qty
30	720/30=24	18
40	720/40=18	13
50	720/50=14	11
60	720/60=12	9
72	720/72=10	8

277V INPUT

Wattage	Max. theoretical daisy-chain qty	Conservative rated daisy-chain qty
30	1662/30=55	40
40	1662/40=41	30
50	1662/50=33	25
60	1662/60=27	20
72	1662/72=23	18

Remark：18 AWG wire overload current: 6A

Daisy-chain calculation: Allowable wire load ÷ Fixture wattage,

Where the total allowable wire load is based on a wire current limit of 6A:

At 120V: 6A × 120V = 720W

At 277V: 6A × 277V = 1662W

LINKABLE PLATE (SOLD SEPERATELY)

Usea linkable plate (optional) to connect two fixtures on the back.

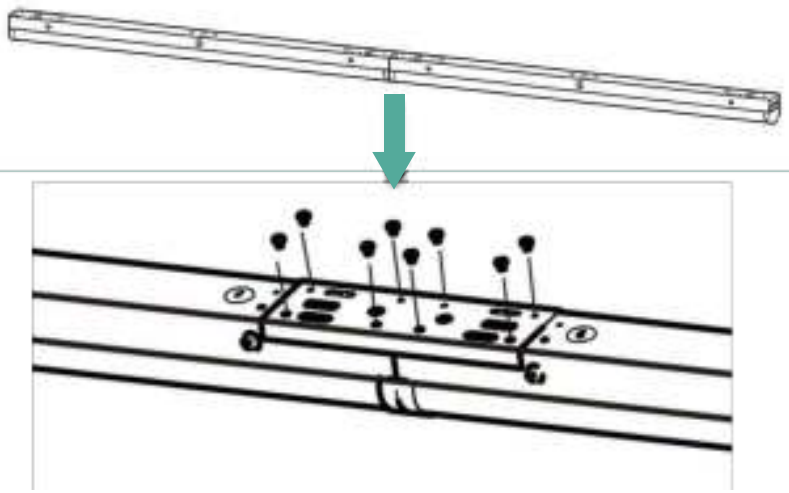

CEILING INSTALLATION INSTRUCTION

LED LINEAR STRIP LIGHT

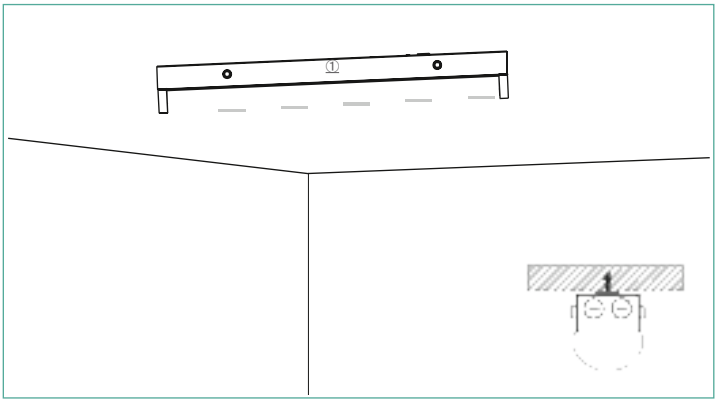

1.Punch a hole on the wall and put the expansion tube inside.

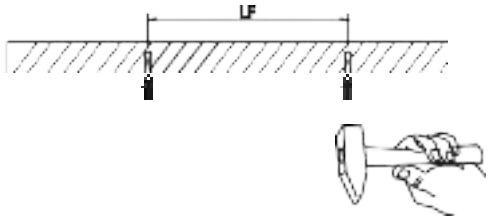

4FT:LF=36.22”

8FT:LF=83.38”

2.Make sure the power is off and wiring by using wire nuts.

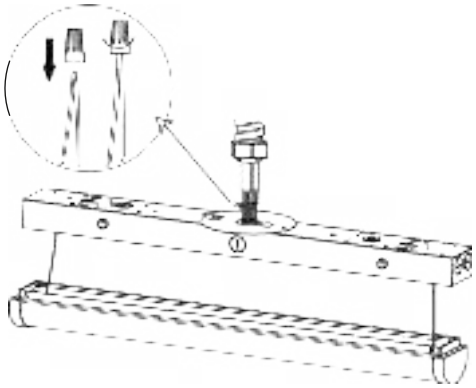

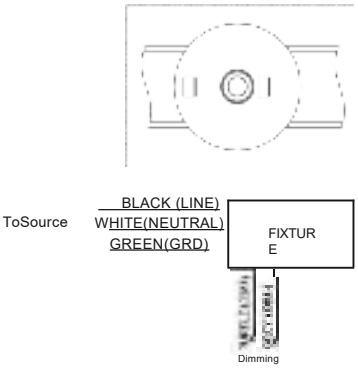

3.Secure the fixture on the wall and lock it in tight.

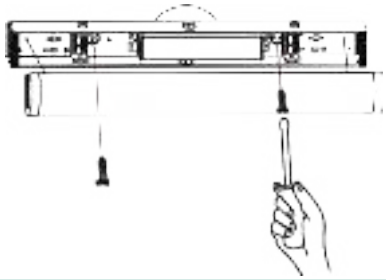

4. Press upward the cover and lock it with springs tightly which located into the fixture.

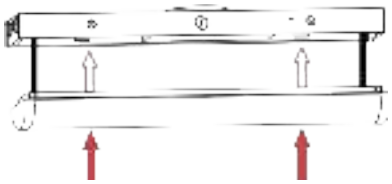

Press the cover right above the buckles

5.The installation completed.

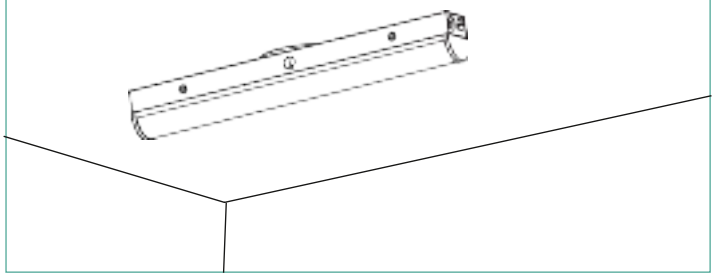

6.Press the buckle on both sides and remove, if you need to disassemble the cover.

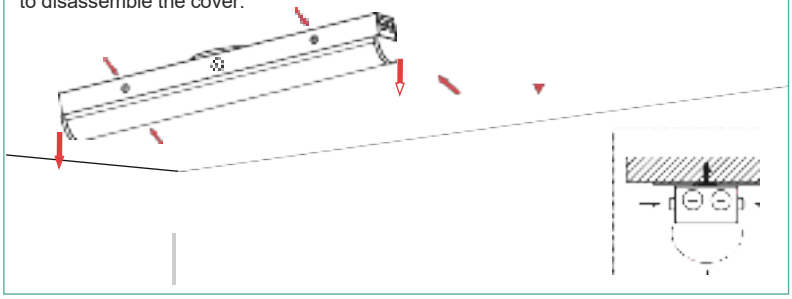

LED LINEAR STRIP LIGHT

Suspension Installation Instruction

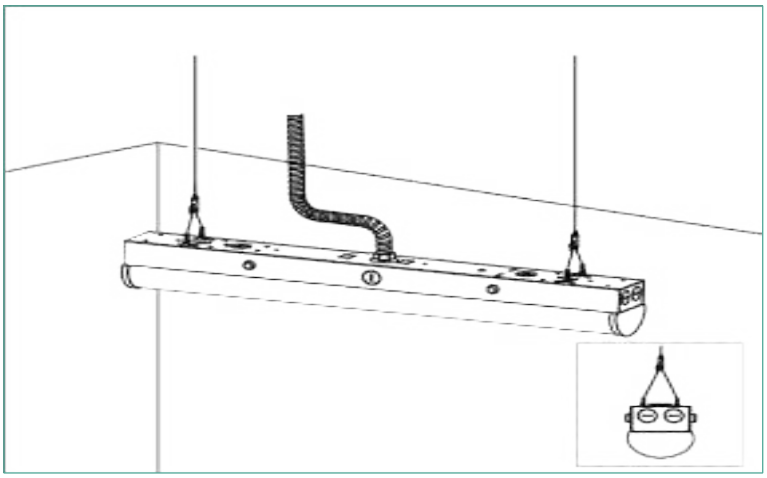

1.Fixing the hook and suspending the lamp.

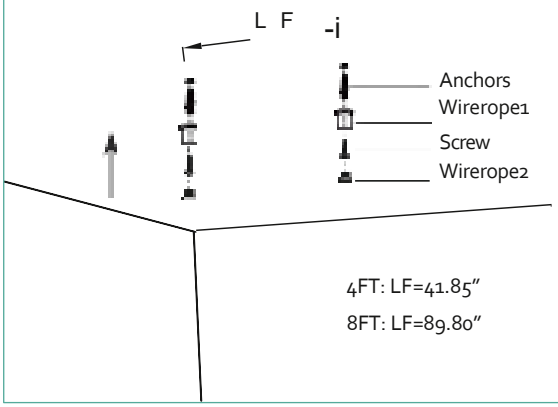

2. Adjusting the hanging rope length.

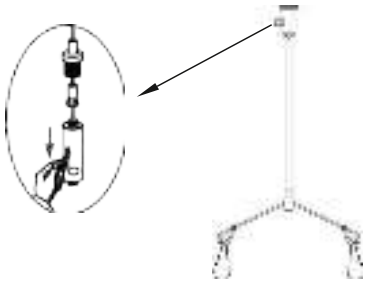

3. Adjusting the hanging rope making the LEDSrtip in a horizontal state.

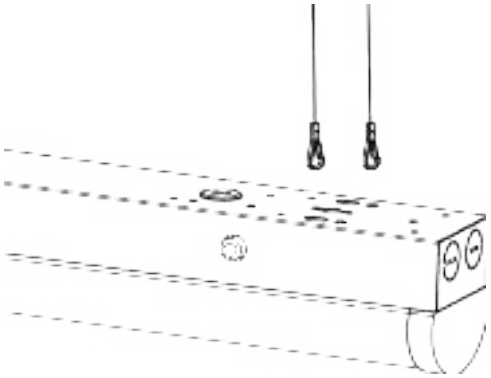

4.Make sure the power is off and wiring by using wire nuts.

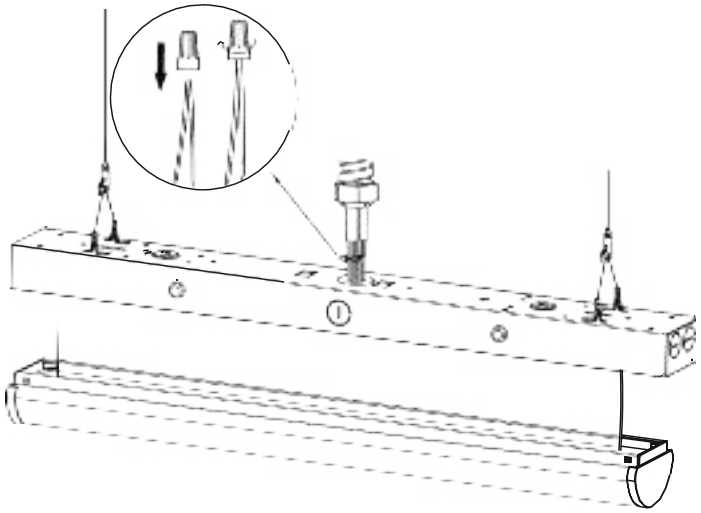

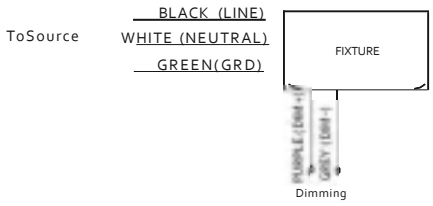

LED LINEAR STRIP LIGHT

5.Insert the terminal block and wires into the lamphousing.

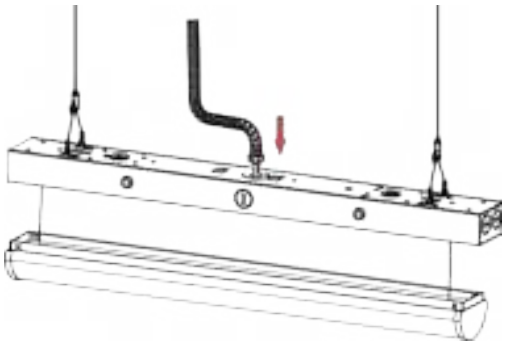

6.Press upward the cover and lockit.

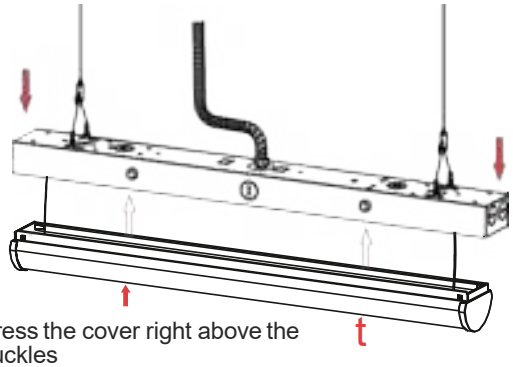

Press the cover right above the buckles

7.The installation completed.

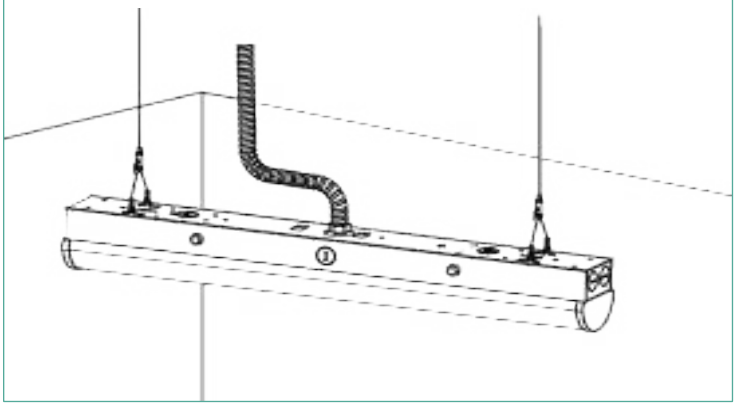

8.Press the buckle on both sides and remove, if you need to remove the cover.

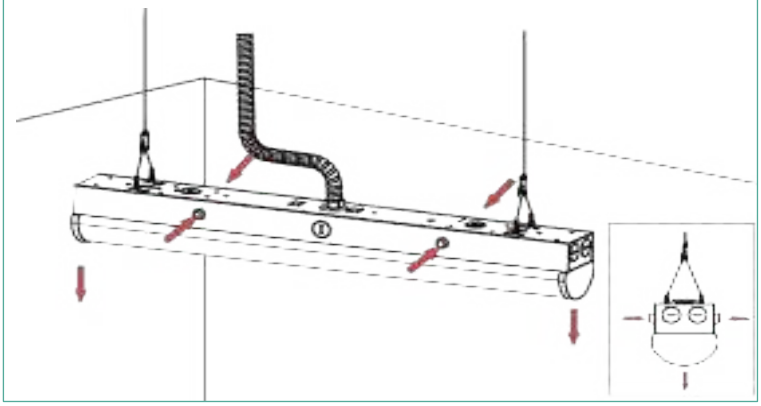

Emergency Version (Optional)

*The red emergency test switch is on the side of the lamp body



Wiring Diagram:

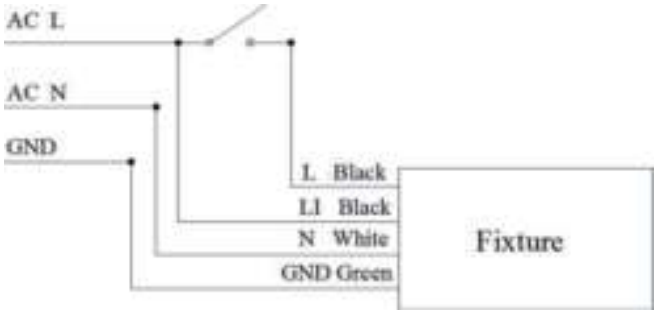

LED LINEAR STRIP LIGHT

EMERGENCY OPERATION(STATE OF INDICATOR LIGHT)			
Model	**Operation**	**State of the indicator light**	**Power states and solution**
AC model	Don’t press test switch	Light is on	charging
DC model 1	Press test switch one time	Light is 2S on and 2S off (flashes slowly)	The battery is undergoing a 30S short-term emergency test
DC model 2	Press the test switch twice continuously	Light is 2S on and 2S off(flashes slowly)	The battery is undergoing a long term emergency test until the battery is fully discharged
Error	When the light is on for 0.2S and then 0.2S off(flashes quickly),it means that the emergy power supply is faulty.Please turn off the AC input power supply,and contact the manufacturer.		

FACTORY PRE-INSTALLED MOTION SENSOR VERSION (OPTIONAL)

SENSOR COVERAGE

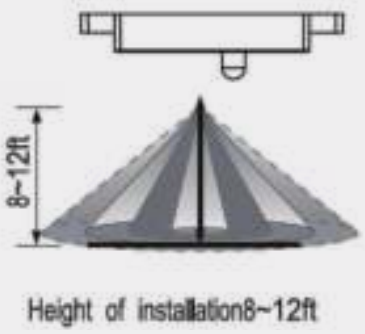

Height of installation8~12ft



(Height of installation8ft)
Detection range



Detection angel

Once powering the device up, the Sensor will use factory default parameters to operate.If adjustments are needed,"RC-100“ Wireless IR Configuration tool must be used.

Factory Default Settings:

BRIGHTNESS: 100% ; DAYLIGHT SENSOR: OFF;

SENSITIVITY: 100% ; STAND-BY DIM: 30%;

HOLD TIME: 5 Minutes; STAND-BY TIME: 60 minutes.

RC100
(Separate to buy)

LED LINEAR STRIP LIGHT

UTILIZING FIELD AND INTRODUCTION

This is a moving object sensor that can detect range of 360。. and it's working frequency is 5.8GHz.The advantage of this product is stable working state (stable working temperature: -40。C~+70。C). This sensor adopts a microwave sensor (high-frequency output <0.2mW), so that it is safe and performsbetter than infrared sensor.

FUNCTION AND OPTIONS

The microwave sensor to achieve tri-level dimming control, for some areas that require a light change notice before switch off. It offers 3 levels of the light Control: 100%-dimming light(0/10%/30%/50%)-off; and 2 periods of selectable waiting time: motion hold-time and stand-by time, Selectable daylight thresholdand choice of detection area.



With suffcient natural light, the light does not switch on when presence detected.



With insufficient natural light, the sensor switches on the light automatically when person enters the (options) standby level after the room.The lamp never switch off with presence, even the nature light is sufficient.



People left, lamp still dims to 0/10%/30%/50% (options) standby level after the hold time.



Light switches off automatically after the dimming time elapsed.