LED COMBO LIGHT

ADVANTAGE

- Unique all inclusive lamp, reflector and lens assembly.
- High impact resistant.
- Internal back-up battery provides 90 minutes operation during a power outage.
- Long-lasting, energy efficient Red or Green LED EXIT sign illumination.
- Mounting: top mounted or wall mounted
- 5 years warranty.
- Applications: exit, hallways, doorways, etc.



DETAILS

Features

- Injection-molded, engineering grade, 5VA flame retardant, high-impact, thermoplastic in white finish.
- High performance chrome-plated metallized reflector and plastic lens for optimal light distribution.
- Fully automatic solid-state, two rate charger initiates battery charging to recharge a discharged battery in 24 hours.
- Compact, low-profile design.

Installations

- Universal knockout pattern on back plate for wall.
- EZ-snap thermoplastic mounting canopy included-provides top mounted.

Certifications

- Comply with the requirements of the Standard(s) for Luminaires and are identified with the cETL Listed Mark.

Accessories

- Screw and cap.
- Mounting fixing hardware
- Canopy

Warranty

- All products are guaranteed with a 5-year warranty.
- See Warranty policy for additional information.

DIMENSIONS

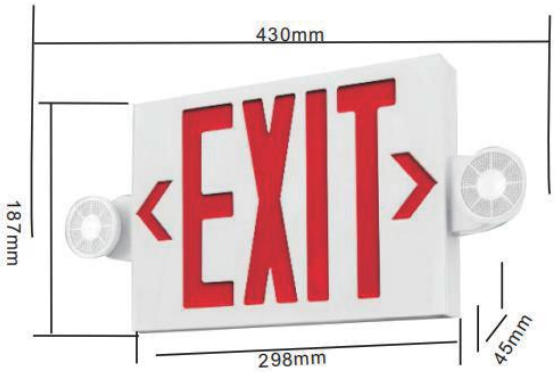

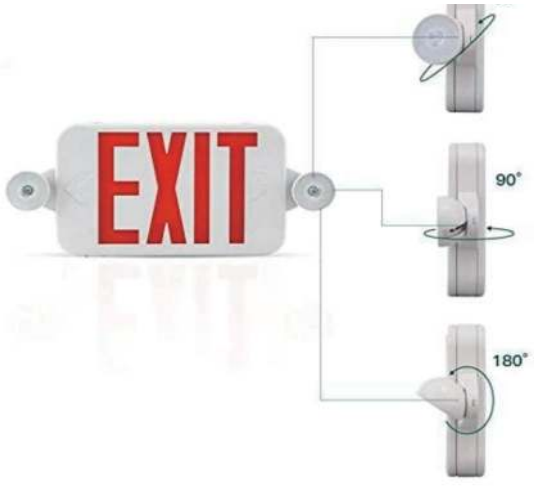

LED COMBO LIGHT

■ SPECIFICATION

	MODEL	WATT	INPUT VOLTAGE	EMERGENCY DURATION	CERTIFICATE
☐	J-EM119	5W	AC120V/277V	≥ 90 mins	cETLus

■ ACCESSORIES

☐ Screw and Cap ☐ Fixing Hardware ☐ Canopy







■ PACKING INFO

MODEL	14PCS/CARTON	420PCS/PALLET		CONTAINER		
	DIMENSION(INCH)	N.W(LBS)	G.W(LBS)	20'GP(PCS)	40'GP(PCS)	40HQ(PCS)
J-EM119	17.72″ x15.35″ x15.57″	21.2	39.9	5000	8000	10000

■ WARNING

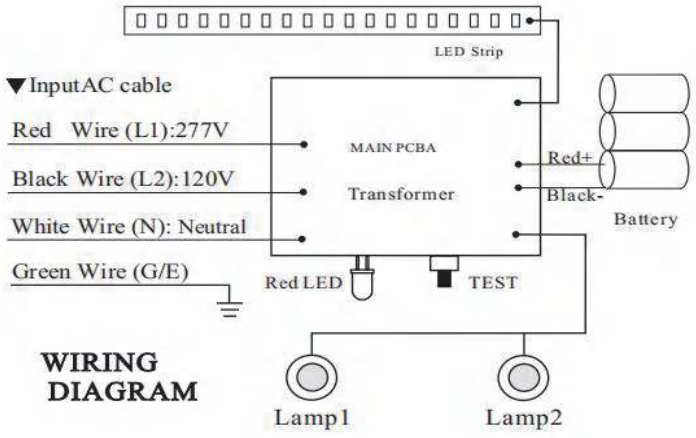

LED COMBO LIGHT

■ INSTALLATIONS

❖ Lamp heads

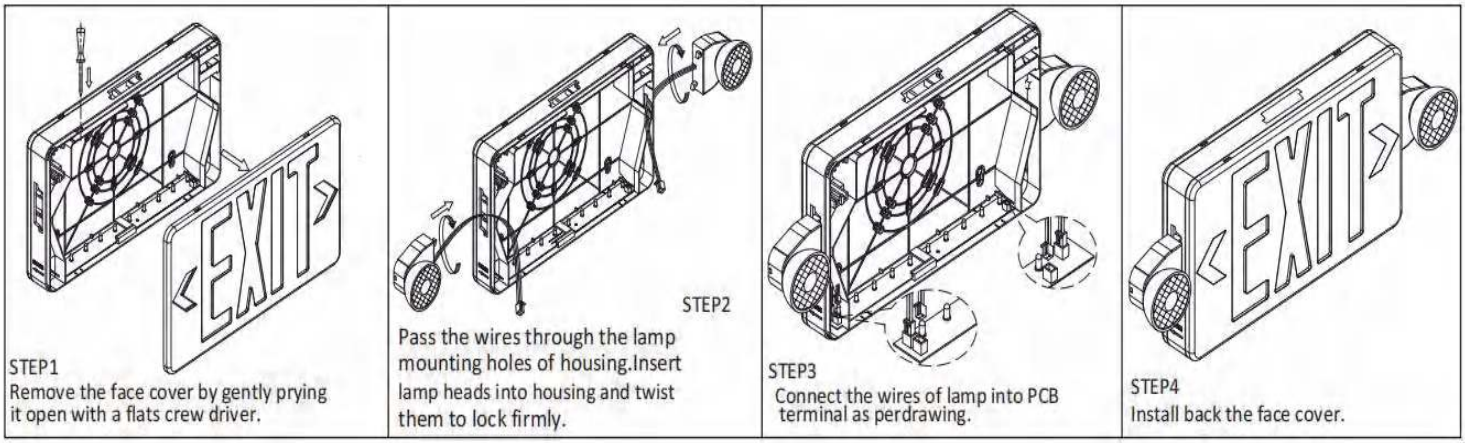

❖ Wall mount

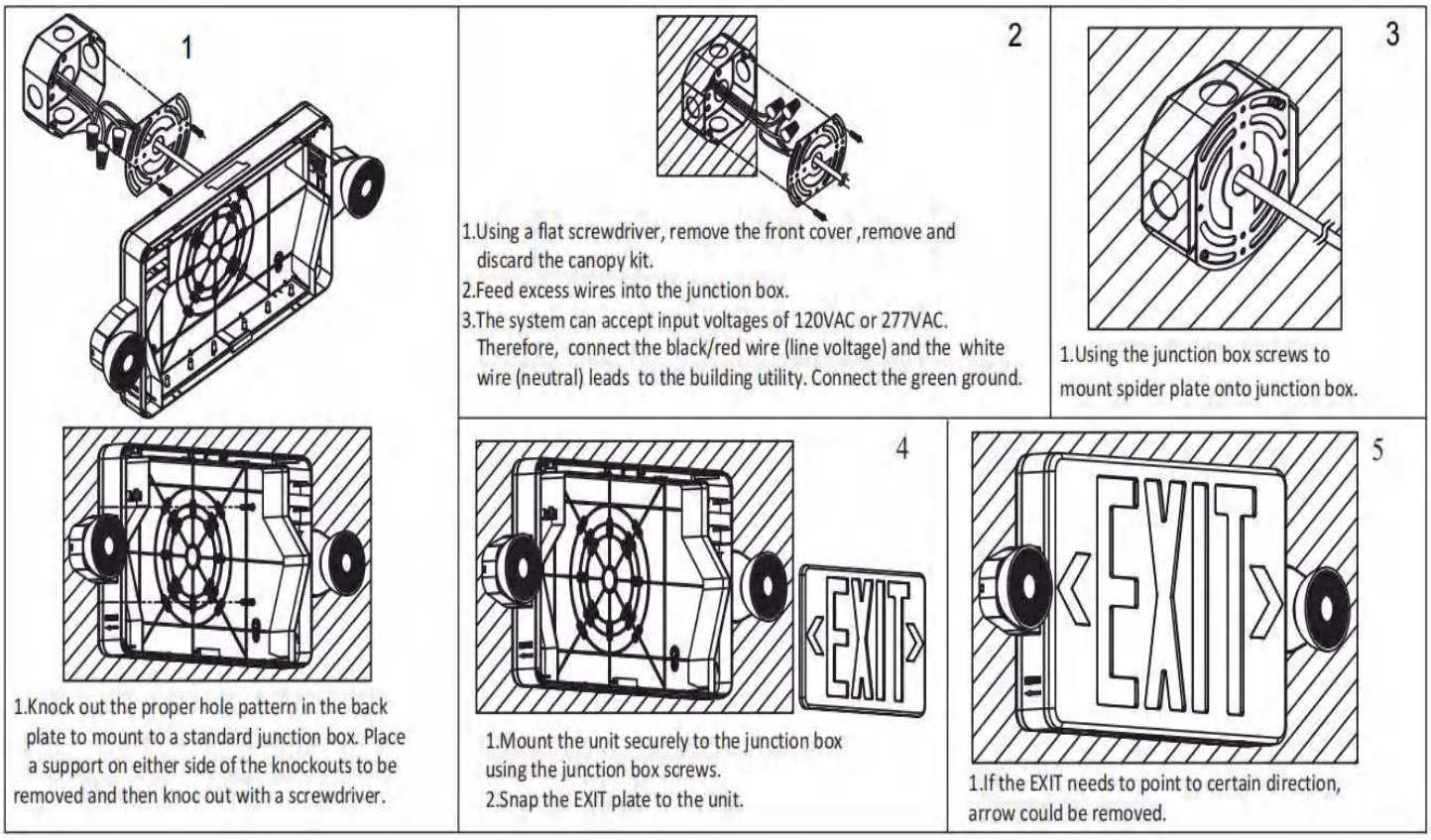

LED COMBO LIGHT

■ INSTALLATIONS

❖ Top mount

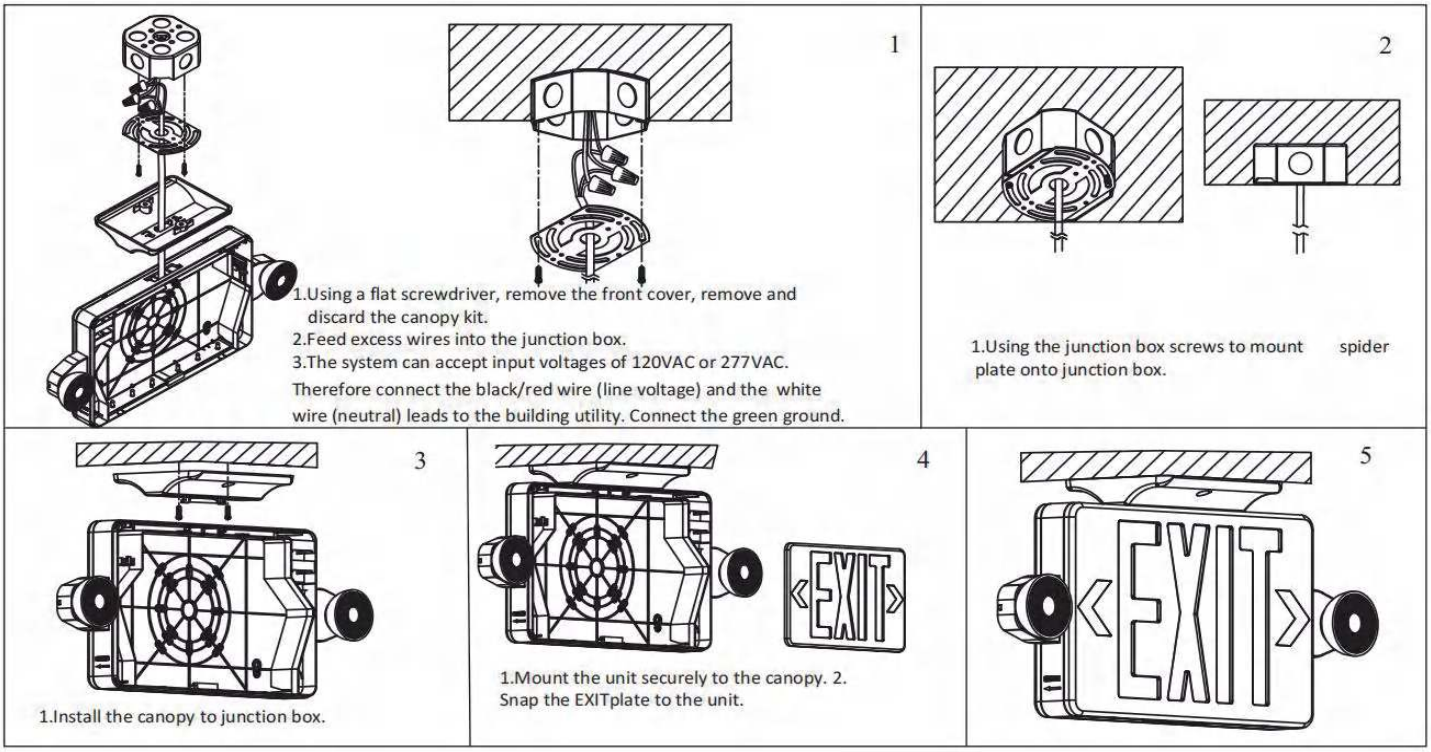

■ APPLICATION

