LED EMERGENCY LIGHT

ADVANTAGE

- High impact resistant.
- Internal back-up battery provides 90 minutes operation during a power outage.
- Use long-lasting, efficient ultra bright white LEDs.
- Mounting: wall mounted.
- 5 years warranty.
- Applications: stairways, hallways, doorways, etc.





DETAILS

Features

- Injection-molded, 5VA flame-retardant and high impact thermoplastic housing, this led emergency lights have high-impact resistant.
- High performance chrome-plated metallized reflector and plastic lens for optimal light distribution.
- 360 degree ratation, the flexibility of the light direction allows you to point the lights at almost a 90 degree angle.

Installations

- Universal knockout pattern on back plate for wall mount.
- Suitable for wall or ceiling mount.

Certifications

- Comply with the requirements of the Standard(s) for Luminaires and are identified with the cETL Listed Mark.

Accessories

- Screw and cap.
- Mounting fixing hardware.

Warranty

- All products are guaranteed with a 5-year warranty.
- See Warranty policy for additional information.

DIMENSIONS

Product Dimension



Multi-angle Rotation



LED EMERGENCY LIGHT

■ SPECIFICATION

	MODEL	WATT	INPUT VOLTAGE	EMERGENCY DURATION	CERTIFICATE
☐	J-EM110	4W	AC120V-277V	≥ 90 mins	cETLus

■ ACCESSORIES

☐ Screw and Cap



☐ Fixing Hardware



■ PACKING INFO

MODEL	14PCS/CARTON	672PCS/PALLET		CONTAINER		
	DIMENSION(INCH)	N.W(LBS)	G.W(LBS)	20'GP(PCS)	40'GP(PCS)	40HQ(PCS)
J-EM110	23.6″ x11.4″ x10.2″	13.4	19.6	7000	12000	14000

■ APPLICATION



LED EMERGENCY LIGHT

■ INSTALLATIONS

❖ J-Box Mounting

1.Feed fixture leads through main bottom case and connect AC power supply (Fig A).
2.Connect wires through J-Box .Place bottom case on J-Box and secure with screws.
3.Connect battery only when continuous AC power can be provided to the unit(Fig B) .
4.Align snaps and push housing directly onto main bottom case (Fig C) apply continuous AC power and press "TEST" button to check lamps.

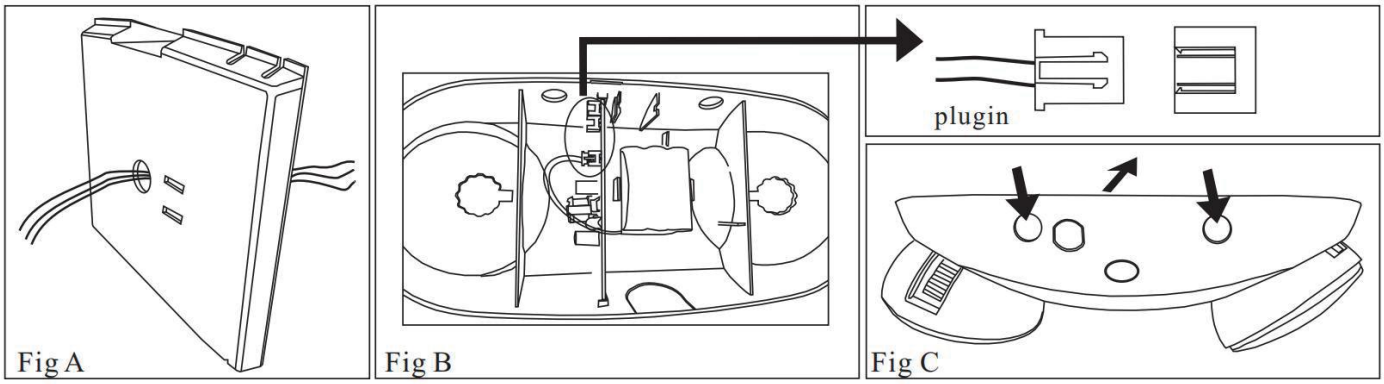

❖ Conduit

1.During an electrical power failure, the lamps will automatically come on for a minimum of 90 minutes.
2.To test ,press the “TEST” switch , the emergency lamps will illuminate. When the switch is released ,the lamp will go off.

❖ WIRING DIAGRAM

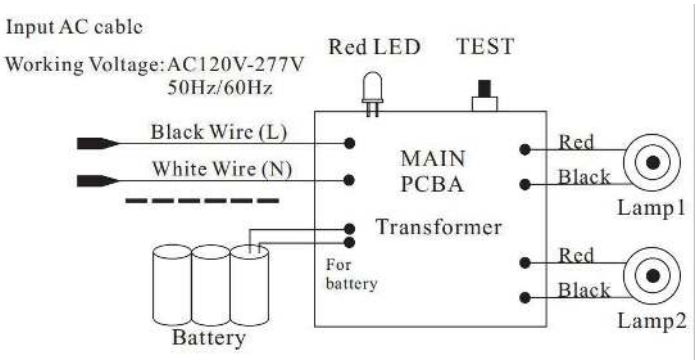

❖ ADJUST LAMP HEADS AND LENS

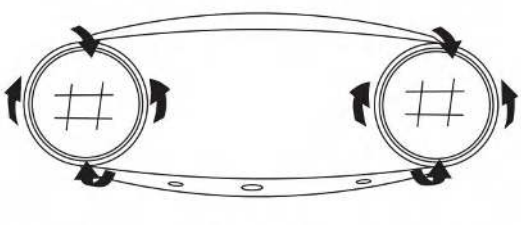

Only narrow lens has adjustable function.
Adjust lamp heads and lens direction according your needs.