Solar LED Round Bollard Light

Wattages: 5W



The working principle of Solar LED Round Bollard Light: The solar panel is irradiated by sunlight, absorbs the sun light and converts it into electric energy to charge the battery. At night, the battery pack provides power to supply the LED lighting to realize the illumination.

The DC controller can ensure that the battery pack is not damaged due to overcharging or overdischarging,meanwhile, it has temperature compensation and lightning protection, reverse polarity protection and other functions such as Light control, Can be illuminated for about 3 rainy days.

Ideal for park,villa residence,Lawns,Courtyards, Roadways and many other applications.

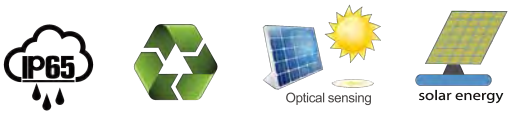

FEATURES

- High luminous efficiency and long working life.
- A special solar controller is used.
- Osram light source chip is used.
- Monocrystalline silicon solar panel
- Excellent optics design, greatly improve the light utilization and evenness.

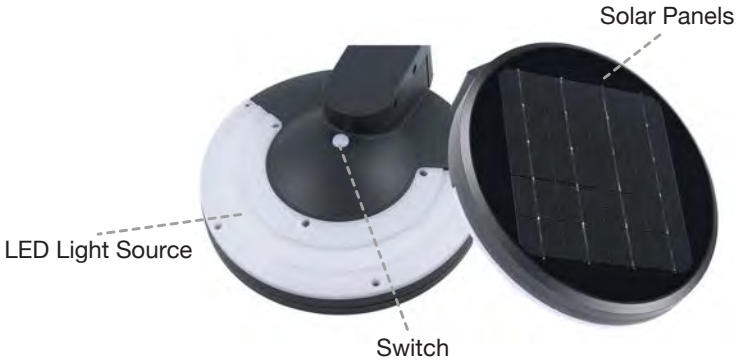

SPECIFICATION	
TYPE	WSD-SPRBL5W5-50K-B
WATTAGE	5W
CCT	5000K
LUMEN	266 LM
CRI	80
MATERIAL	Die-casting aluminum
SOLAR PANELS	5V/4.5W
BATTERY	3.2V/6000mAh
CHIP	OSRAM 3030
LAMP SIZE	φ9.33 X 39.37 inch
WORKING TIME	≥10H
CHARGING TIME	≥5H
WORKING TEMPERATURE	-4°F ~ 122°F
CABLE	NO
OUTDOOR RATING	IP65
WARRANTY	2 year limited

Solar LED Round Bollard Light

Wattages: 5W

DIMENSION

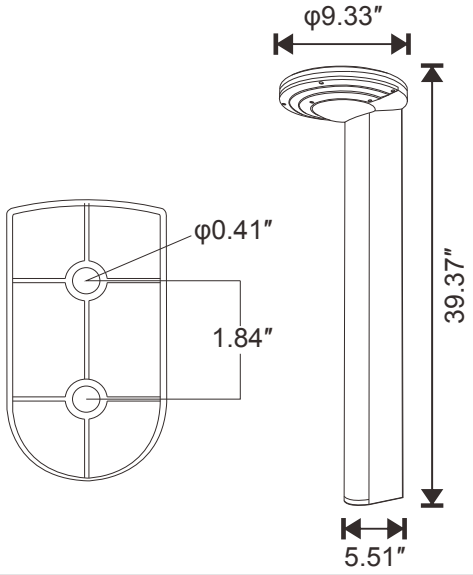

PACKAGING INFORMATION

❖**WSD-SPRBL5W5-50K-B**

OUTER BOX:

1000MMX260MMX260MM(4Pcs/CTN)

(39.37" X10.24" X10.24")

SPECIFICATIONS:

Shell materials: Aluminum & PC

Net weight : 5.71 lbs

Finish: Black(Standard)

Product Size:φ237 X 1000(mm)

9.33″X39.37″

ACCESSORIES (standard)



Expansion Screw



Mounting Plate+Screw

ORDERING INFORMATION

EXAMPLE: **WSD-SPRBL5W5-50K-Z[D, W, B, S]**

WSD	SPRBL	5W	5	50K	Z
COMPANY	PRODUCT	WATTAGE	VOLTAGE	CCT	FINISH
	(Solar LED Round Bollard Light)	**5W** - (5W)	**5** - (5V)	**50K** - (5000K)	**D** - (Dark Bronze) **W** - (White) **B** - (Black) **S** - (Silver)

PHOTOMETRICS

For complete IES files, please visit our website.

WSD-SPRBL5W5-50K

