Solar LED Square Tapered Wall Sconce Light

Wattages: 5W



The working principle of Solar LED Wall Sconce Light: The solar panel is irradiated by sunlight, absorbs the sun light and converts it into electric energy to charge the battery. At night, the battery pack provides power to supply the LED lighting to realize the illumination.

The DC controller can ensure that the battery pack is not damaged due to overcharging or overdischarging,meanwhile, it has temperature compensation and lightning protection, reverse polarity protection and other functions such as Light control, Can be illuminated for about 3 rainy days.

Ideal for park,courtyard,villa residence,walls and many other applications.



FEATURES

- High luminous efficiency and long working life.
- A special solar controller is used.
- Osram light source chip is used.
- Monocrystalline silicon solar panel.
- Excellent optics design, greatly improve the light utilization and evenness.

SPECIFICATION	
TYPE	WSD-SPSWP5W5-50K-B
WATTAGE	5W
CCT	5000K
LUMEN	332.83 LM
CRI	80
MATERIAL	Die-casting aluminum
SOLAR PANELS	5V/5W
BATTERY	3.2V/6000mAh
CHIP	OSRAM 3030
LAMP SIZE	7.87 X7.87 X 9.45 inch
WORKING TIME	≥8H
CHARGING TIME	≥5H
WORKING TEMPERATURE	-4°F ~ 122°F
CABLE	NO
OUTDOOR RATING	IP65
WARRANTY	2 year limited

Solar LED Square Tapered Wall Sconce Light

Wattages: 5W

DIMENSION

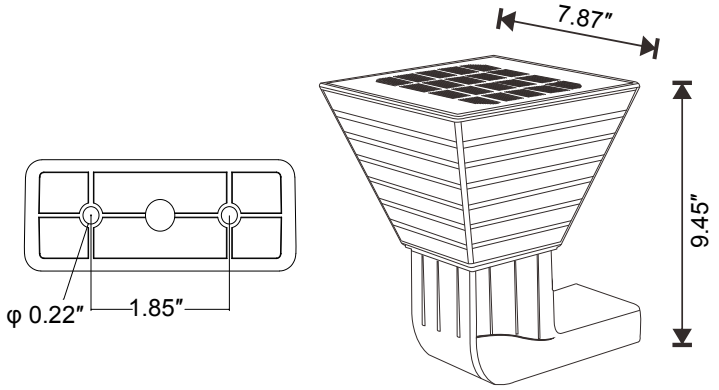

PACKAGING INFORMATION

❖**WSD-SPSWP5W5-50K-B**

INNER BOX:
260MMX220MMX280MM(1Pcs/CTN)
(10.24" X8.66" X11.02")

OUTER BOX:
540MMX460MMX320MM(4Pcs/CTN)
(21.26" X18.11" X12.60")

SPECIFICATIONS:

Shell materials: Aluminum & PC
Net weight : 3.3 lbs
Finish: Black(Standard)
Product Size:200 X 200X240(mm)
7.87″X7.87″X9.45″

ACCESSORIES (Standard)



Screw+Hex wrench

ORDERING INFORMATION

EXAMPLE: **WSD-SPSWP5W5-50K-Z[D, W, B, S]**

WSD	SPSWP	5W	5	50K	Z
COMPANY	PRODUCT	WATTAGE	VOLTAGE	CCT	FINISH
WSD LED INC	**SPSWP** (Solar LED Square Wall Mount Light)	**5W** - (5W)	**5** - (5V)	**50K** - (5000K)	**D** - (Dark Bronze) **W** - (White) **B** - (Black) **S** - (Silver)

PHOTOMETRICS

For complete IES files, please visit our website.

WSD-SPSWP5W5-50K

