LBS Lighting

LED GROW LIGHT INSTRUCTIONS

Matters needing attention:

To users:thank you for purchasing our products!
Please read carefully before use,please keep this manual for reference!

In order to ensure safe construction,please confirm the following important matters before each work begins:

1.Risk of fire or electric shock: turn off power before installing.

2.Always use product within Safe Working Load.

3.Designed for statically positioned hanging.Do not use for liftung or with dynamic positioning.

4.Do not walk or stand on product.

5.Always use manufacturer supplied and specified cables. Never use uncoated cables.

6.Do not apply oil or any other lubricant to the fastener or any other part of the cable assembly.

Installation steps:

❗The osram red chips are fragile, please do not touch!

❶Install the string on the beam

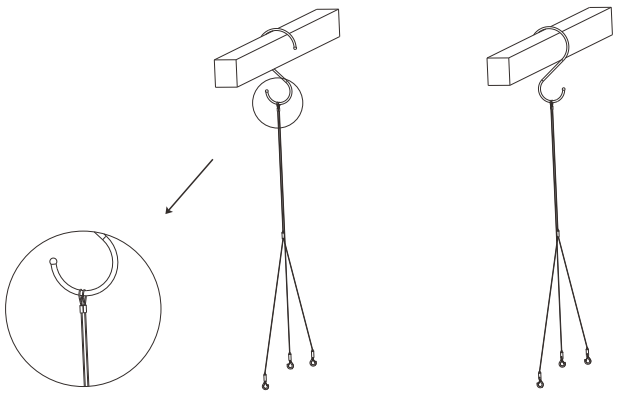

❷Assembled light

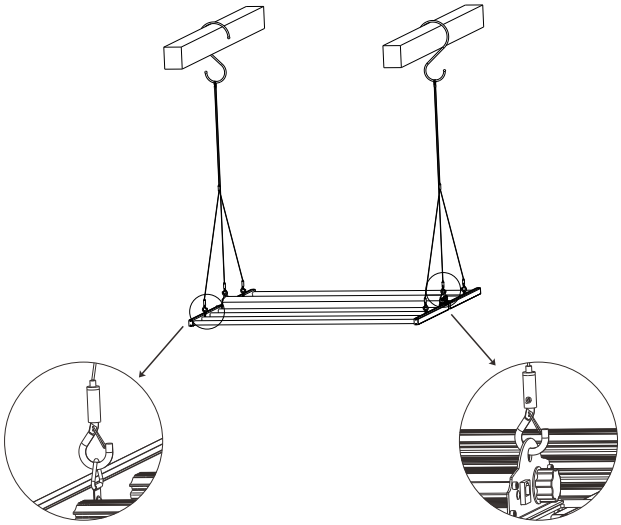

LBS Lighting

❸ Connecting dimming cable

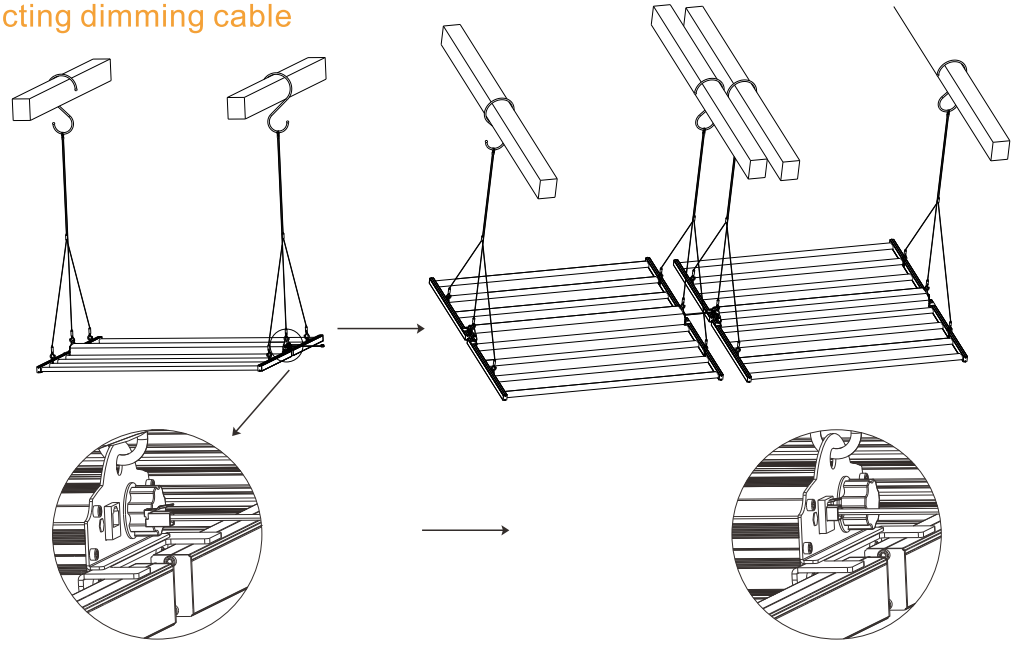

The connections of the second light refers to the first light

❹ Connecting the power cord

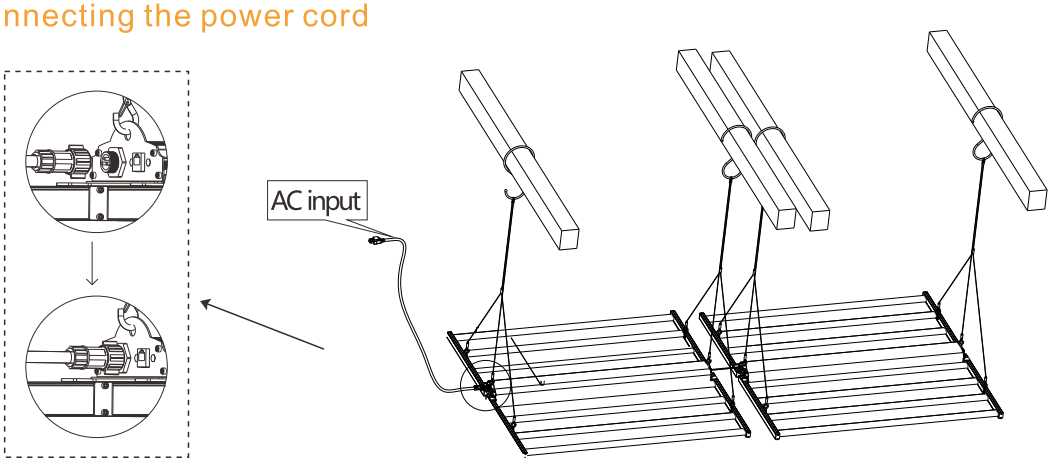

❺ All set

