LED DOWN LIGHT

Wattages: 15W

LED Down Light can be widely used in indoor lighting (Damp location) suitable for office,indoor playground,hotle, shop,indoor entertainment places,and other indoor place.



TIME SWITCH
5MIN (FACTORY SETTINGS)

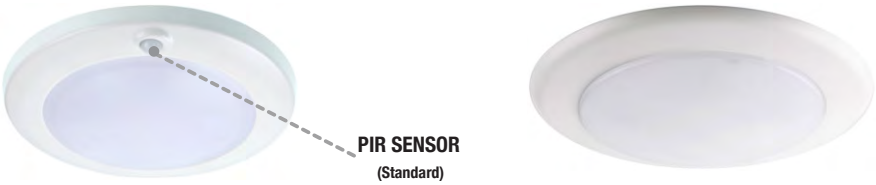

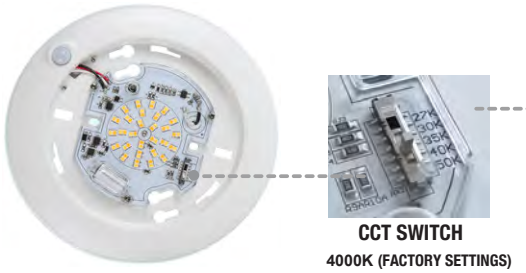

D556-90-CCT-WH-MS

D236D-90-CCT-WH

Features

- Energy efficient: save up to 80% in energy costs
- High lumen output
- Mercury-free
- Instant-on light
- 50,000 hours at 70% lumen maintenance rated life
- CCT:2700-5000K
- PIR Sensor Function Available
- 5 years manufacturer warranty
- Compatible with most Lutron and Leviton dimmers



SPECIFICATION		
TYPE	D556-90-CCT-WH-MS	D236D-90-CCT-WH
WATTAGE	15W	15W
LUMEN	1135.9 lm	1218.3 lm
EFFICACY	> 75 lm/W	> 80 lm/W
CCT	2700K,3000K,3500K,4000K,5000K	
CRI	> 90	
INPUT VOLTAGE	AC120V	
LIGHTING ANGLE	114	
DIMMABLE	Non-dimmable	
LED TYPE	SMD2835	
CERTIFICATE	UL,Energy Star	UL,Energy Star,FCC,Lighting Facts
TIME ADJUSTABLE	1min/5min/10min	none
DESCRIPTION	PRI Sensor and CCT Adjustable (5-6")	CCT Adjustable (5-6")
LIFE TIME	50000 hours	
WARRANTY	5 year limited	

LED DOWN LIGHT

Wattages: 15W

DIMENSION

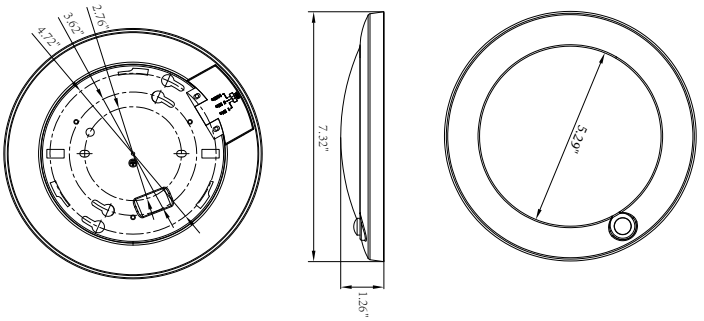

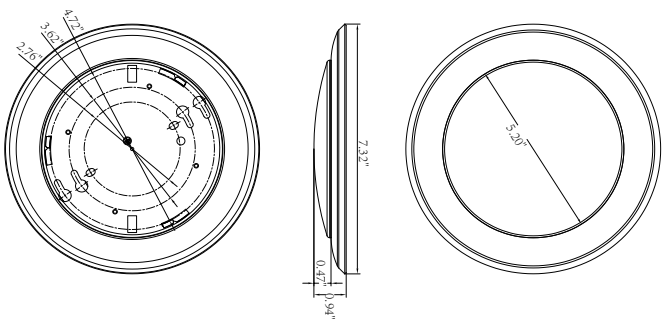

WATTAGE	D556-90-CCT-WH-MS
NT. WEIGHT	0.73 lbs
BOX DIM.	15.75” x 13.07” x 8.07” (12 pcs)

WATTAGE	D236D-90-CCT-WH
NT. WEIGHT	0.57 lbs
BOX DIM.	15.75” x 12.60” x 8.07” (12 pcs)

STANDARD ACCESSORIES



SPRING CARD BUCKLE



INSTALL SCREWS AND TERMINALS



E27 LAMP HOLDER

ORDERING INFORMATION

EXAMPLE:

D556-90-CCT-WH-MS/D236D-90-CCT-WH

D	556	90	CCT	WH	MS
PRODUCT	NUMBER	CRI	CCT	FINISH	CONTROL
D LED DOWN LIGHT	**556** - (556) **236** - (236)	**90** CRI=90	**CCT** CCT Adjustable	WH - (White)	MS - (PRI Sensor)

LED DOWN LIGHT

Wattages: 15W

PHOTOMETRICS

For complete IES files, please visit our website.

D556-90-CCT-WH-MS

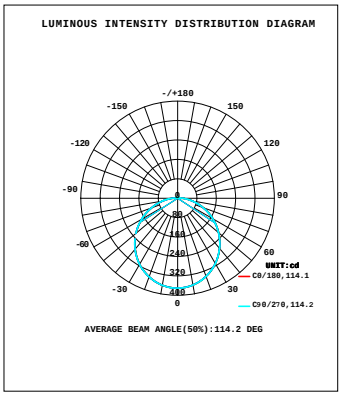

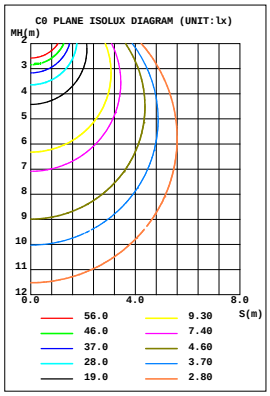

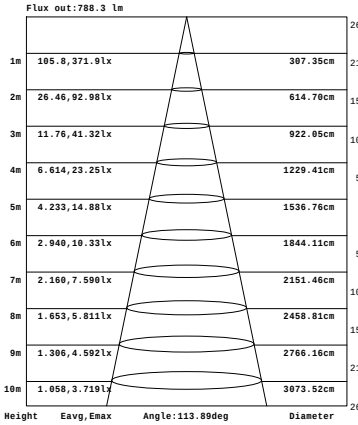

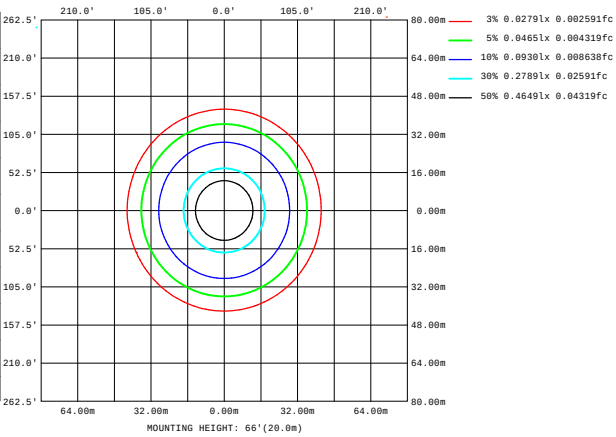

D236D-90-CCT-WH

